LOAD CHARTS

for Use With

WRITTEN EXAMINATIONS

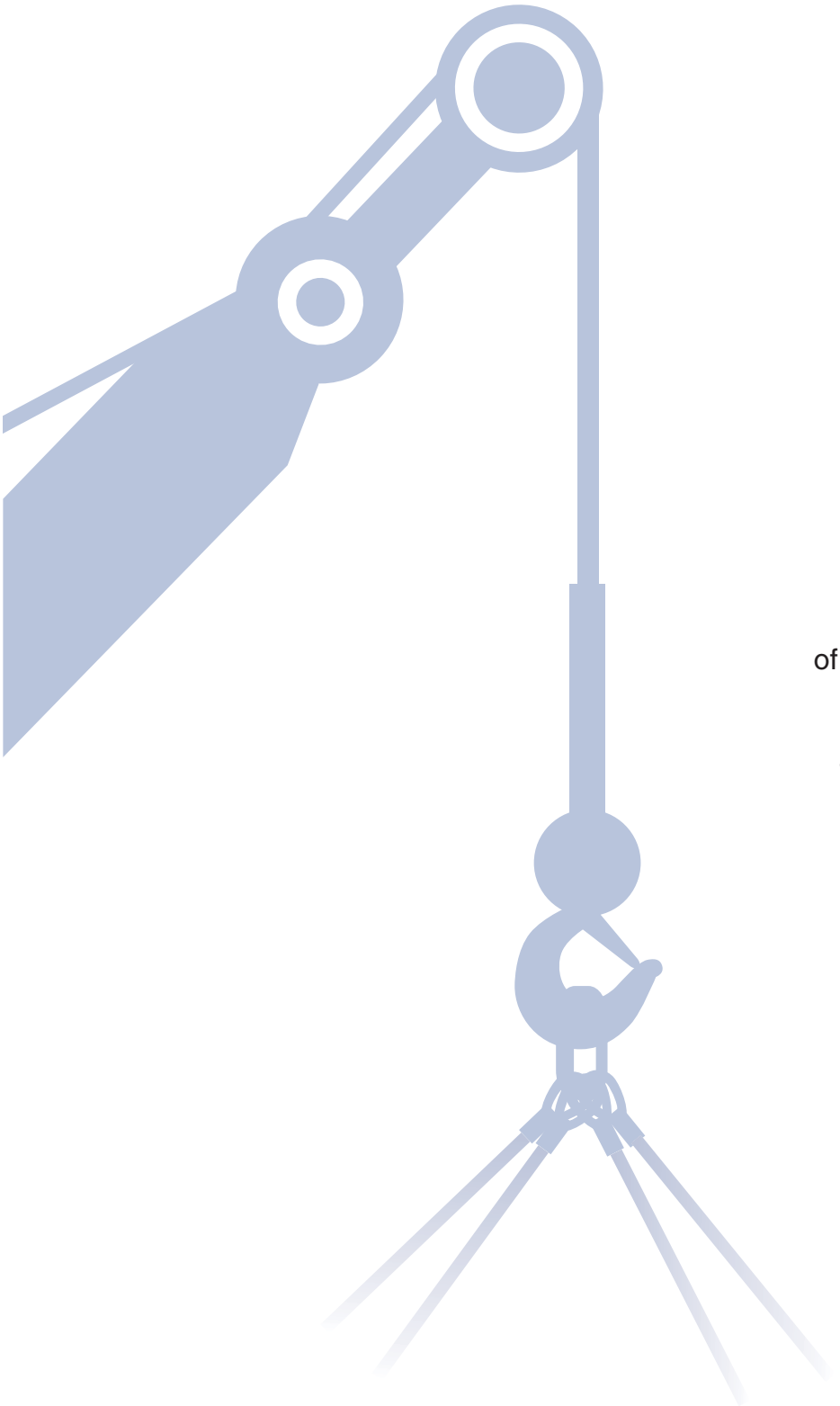

Link-Belt HTC-8675 Series II

Link-Belt Construction Equipment Company, by providing pages of one of its manuals, is not providing a substitute for training on a Link-Belt crane.

These pages are reproduced for illustration only and not as a substitute for reviewing the entire manual for a particular crane.

Make sure that you are fully trained on, and review the entire manual for, every crane you operate.

This load chart has been adapted from the original manufacturer's load chart for use in the NCCER Mobile Crane Certification Examination. It is not to be used for calculating loads, planning lifts, or for any other purpose.

Technical Data

Specifications & Capacities

HTC 8675

Series II

Telescopic Boom Truck Crane

75 ton *(70.0 metric ton)*

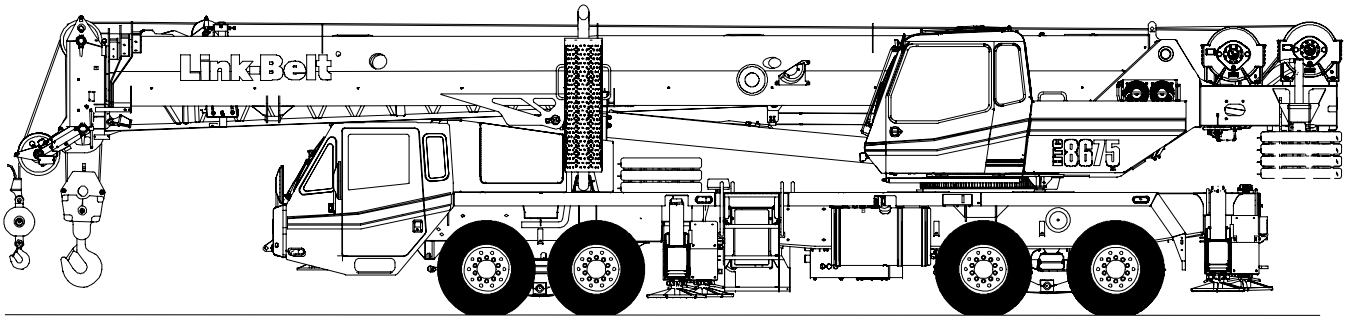

CAUTION: This material is supplied for reference use only. Operator must refer to in – cab Crane Rating Manual and Operator's Manual to determine allowable crane lifting capacities and assembly and operating procedures.

Table Of Contents

Boom, Attachments, and Upper Structure 1
Boom 1
Boom Wear Pads 1
Boom Head 1
Boom Elevation 1
Auxiliary Lifting Sheave – Optional 1
Hook Blocks and Balls – Optional 1
Fly – Optional 1
Fly Extensions – Optional 1
Upper Operator's Cab and Controls 2
Swing 3
Electrical 3
Additional Equipment 3
Load Hoist System 3
Load Hoist Performance 3
2M Main and Optional Auxiliary Winches 3
Hydraulic System 4
Counterweight 4
Carrier 6
General 6
Outriggers 6
Steering and Axles 6
Suspension 6
Tires and Wheels 6
Brakes 6
Electrical 6
Engine 6
Transmission 6
Carrier Speeds and Gradeability 7
Fuel Tank 7
Hydraulic System 7
Pump Drive 7
Lower Cab and Controls 8
Additional Equipment 8
Axle Loads 9
Axle Loads with 2–Axle or 3–Axle Boom Dolly 10
General Dimensions 11
Working Range Diagram 12
Boom Extend Modes 13
Main Boom Lift Capacity Charts – Standard 14
0 lb Counterweight – Fully Extended Outriggers – 360˚ Rotation 14
0 lb Counterweight – On Tires – Stationary – Boom Centered Over Rear 15
0 lb Counterweight – On Tires – Pick & Carry (1 mph) – Boom Centered Over Rear 15
10,800 lb Counterweight – Fully Extended Outriggers – 360˚ Rotation 16
10,800 lb Counterweight – On Tires – Stationary – Boom Centered Over Rear 17
10,800 lb Counterweight – On Tires – Pick & Carry (1 mph) – Boom Centered Over Rear 17

Main Boom Lift Capacity Charts – Optional **18**
14,400 lb Counterweight – Fully Extended Outriggers – 360˚ Rotation 18
14,400 lb Counterweight – On Tires – Stationary – Boom Centered Over Rear 19
14,400 lb Counterweight – On Tires – Pick & Carry (1 mph) – Boom Centered Over Rear 19
18,400 lb Counterweight – Fully Extended Outriggers – 360˚ Rotation 20
18,400 lb Counterweight – On Tires – Stationary – Boom Centered Over Rear 21
18,400 lb Counterweight – On Tires – Pick & Carry (1 mph) – Boom Centered Over Rear 21
Fly Attachment Lift Capacity Charts – Optional **22**
0 lb Counterweight – Fully Extended Outriggers – 360˚ Rotation 22
98.7 ft Main Boom Length 22
127 ft Main Boom Length 23
10,800 lb Counterweight – Fully Extended Outriggers – 360˚ Rotation 24
98.7 ft Main Boom Length 24
127 ft Main Boom Length 26
14,400 lb Counterweight – Fully Extended Outriggers – 360˚ Rotation 28
98.7 ft Main Boom Length 28
127 ft Main Boom Length 30
18,400 lb Counterweight – Fully Extended Outriggers – 360˚ Rotation 32
98.7 ft Main Boom Length 32
127 ft Main Boom Length 34
Main Boom Lift Capacity Charts – Optional (Metric) **36**
0kg Counterweight – Fully Extended Outriggers – 360˚ Rotation 36
0kg Counterweight – On Tires – Stationary – Boom Centered Over Rear 37
0kg Counterweight – On Tires – Pick & Carry (1 km/h) – Boom Centered Over Rear 37
4 900kg Counterweight – Fully Extended Outriggers – 360˚ Rotation 38
4 900kg Counterweight – On Tires – Stationary – Boom Centered Over Rear 39
4 900kg Counterweight – On Tires – Pick & Carry (1 km/h) – Boom Centered Over Rear 39
6 530kg Counterweight – Fully Extended Outriggers – 360˚ Rotation 40
6 530kg Counterweight – On Tires – Stationary – Boom Centered Over Rear 41
6 530kg Counterweight – On Tires – Pick & Carry (1 km/h) – Boom Centered Over Rear 41
8 345kg Counterweight – Fully Extended Outriggers – 360˚ Rotation 42
8 345kg Counterweight – On Tires – Stationary – Boom Centered Over Rear 43
8 345kg Counterweight – On Tires – Pick & Carry (1 km/h) – Boom Centered Over Rear 43
Fly Attachment Lift Capacity Charts – Optional (Metric) **44**
0kg Counterweight – Fully Extended Outriggers – 360˚ Rotation 44
30.1m Main Boom Length 44
38.71m Main Boom Length 44
4 900kg Counterweight – Fully Extended Outriggers – 360˚ Rotation 45
30.1m Main Boom Length 45
38.71m Main Boom Length 46
6 530kg Counterweight – Fully Extended Outriggers – 360˚ Rotation 46
30.1m Main Boom Length 46
38.71m Main Boom Length 47
8 345kg Counterweight – Fully Extended Outriggers – 360˚ Rotation 49
30.1m Main Boom Length 49
38.71m Main Boom Length 50

Boom, Attachments, and Upper Structure

■ Boom

Design – Four section, formed construction of extra high tensile steel consisting of one base section and three telescoping sections. The two plate design of each section has multiple longitudinal bends for superior strength. Each telescoping section extends independently by means of one double–acting, single stage hydraulic cylinder with integrated holding valves.

Boom

- 41 – 127 ft (*12.5 – 38.71m*) four section boom
- Integral boom dolly connection
- Four boom extend modes (EM1 through EM4), controlled from the operator's cab, provide superior capacities by varying the extension of the telescoping sections:
  - EM1 extends to 127.0 ft (*38.71m*)
  - EM2 extends to 113.1 ft (*34.5m*)
  - EM3 extends to 98.7 ft (*30.1m*)
  - EM4 extends to 76.0 ft (*23.2m*)
- Mechanical boom angle indicator
- Maximum tip height for each extend mode is:
  - EM1 is 136 ft (*41.5m*)
  - EM2 is 122 ft (*37.3m*)
  - EM3 is 108 ft (*33.0m*)
  - EM4 is 86 ft (*26.2m*)

Boom Wear Pads

- Wear pads with Teflon inserts that self–lubricate the boom sections
- Bottom wear pads are universal for all boom sections
- Top wear pads are universal for all boom sections

Boom Head

- Five 16.5 in (*41.9cm*) root diameter nylon sheaves to handle up to ten parts of line
- Easily removable wire rope guards
- Rope dead end lugs on each side of the boom head
- Boom head is designed for quick–reeve of the hook block

Boom Elevation

- One double acting hydraulic cylinder with integral holding valve
- Boom elevation: –3˚ to 80˚

Auxiliary Lifting Sheave – Optional

- Single 16.5 in (*41.9m*) root diameter nylon sheave
- Easily removable wire rope guards
- Does not affect erection of the fly or use of the main head sheaves

Hook Blocks and Balls – Optional

- 40 ton (*36.3mt*) 4 sheave quick–reeve hook block with safety latch
- 60 ton (*54.4mt*) 4 sheave quick–reeve hook block with safety latch
- 75 ton (*68.0mt*) 5 sheave quick–reeve hook block with safety latch
- 8.5 ton (*7.7mt*) swivel and non–swivel hook balls with safety latch
- 10 ton (*9.1mt*) swivel and non–swivel hook balls with safety latch

Fly – Optional

- 38 ft (*11.58m*) one piece lattice fly, stowable, offsettable to 2˚, 15˚, 30˚, and 45˚. Maximum tip height is 173 ft (*52.9m*).
- 38 ft–64 ft (*11.58 – 19.51m*) two piece bi–fold lattice fly, stowable, offsettable to 2˚, 15˚, 30˚, and 45˚. Maximum tip height is 199 ft (*60.6m*).

Fly Extensions – Optional

- One 16 ft (*4.88m*) lattice extension, equipped with two 16.5 in (*41.9cm*) root diameter nylon sheaves, to be mounted between the boom head and fly options. Maximum tip height is 214 ft (*65.4m*). Minimum of 10,800 lb (*4 900kg*) of counterweight required.
- Two 16 ft (*4.88m*) lattice extensions, one equipped with two 16.5 in (*41.9cm*) root diameter nylon sheaves, to be mounted between the boom head and fly options. Maximum tip height is 230 ft (*70.2m*). Minimum of 14,400 lb (*6 530kg*) of counterweight required.

■ Upper Operator's Cab and Controls

Environmental Cab – Fully enclosed, one person cab of galvaneal steel structure with acoustical insulation. Equipped with:
- Tinted and tempered glass windows
- Extra–large fixed front window with windshield wiper and washer
- Swing up roof window with windshield wiper
- Sliding left side door with large fixed window
- Sliding rear and right side windows for ventilation
- Six way adjustable, cushioned seat with seat belt and storage compartment
- Diesel fired warm–water heater with air ducts for front windshield defroster and cab floor
- Defroster fan for the front window
- Bubble level
- Circulating fan
- Adjustable sun visor
- Dome light
- Cup holder
- Fire extinguisher
- Left side viewing mirror
- Pull–out cabwalk
- Two position travel swing lock

Air Conditioning – Optional – Integral with cab heating system utilizing the same ventilation outlets

Engine Dependent Heater – Optional – Flameless, warm–water system that does not have a separate fuel tank

Armrest Controls – Two dual axis hydraulic joystick controllers or optional single axis hydraulic controllers for:
- Swing
- Boom hoist
- Main rear winch
- Auxiliary front winch – optional
- Drum rotation indication
- Drum rotation indicator activation switch
- Swing park brake switch
- Winch high/low speed and disable switch(es)
- Diesel particulate filter switch (EPA 2007 Engine Only)
- Warning horn button

Outrigger Controls – Hand held control box with umbilical cord gives the operator the freedom to view operation while setting the outriggers.

Foot Controls
- Boom telescope
- Swing brake
- Engine throttle

Right Front Console – Controls and indicators for:
- Engine ignition
- Engine throttle lock
- Pump enable
- Function disable
- Front windshield wiper and washer
- Cab floodlights
- Warning horn
- Heating controls
- Console dimmer switch
- Bubble level
- 12 volt power connection
- Air conditioning – optional
- Boom floodlight – optional
- Rotating beacon or strobe light – optional
- Third wrap selector switch – optional

Cab Instrumentation – Ergonomically positioned, analog instrumentation for crane operation including:
- Check and stop engine indicators
- Low air pressure warning indicator
- Swing park brake indicator
- Diesel particulate filter indicator (EPA 2007 Engine Only)
- High exhaust temperature indicator (EPA 2007 Engine Only)
- Engine coolant temperature with warning indicator
- Hydraulic oil temperature with warning indicator
- Fuel level with warning indicator
- Tachometer

Rated Capacity Limiter – Microguard 540 color graphic audio–visual warning system integrated into the dash with anti–two block and function limiter. Operating data available includes:
- Crane configuration
- Boom length and angle
- Boom head height
- Allowed load and % of allowed load
- Boom angle
- Radius of load
- Actual load
- Counterweight removal
- Operator settable alarms (include):
  - Maximum and minimum boom angles
  - Maximum and minimum tip height
  - Maximum boom length
  - Left/right swing positions
  - Operator defined area (imaginary plane)

Integrated Third Wrap Indicator – Optional – Microguard color display visually and audibly warns the operator when the wire rope is on the first/bottom layer and when the wire rope is down to the last three wraps.

Internal RCL Light Bar – Optional – Visually informs the operator when crane is approaching maximum load capacity with a series of green, yellow, and red lights.

External RCL Light Bar – Optional – Visually informs the ground crew when crane is approaching maximum load capacity with a series of green, yellow, and red lights.

Swing

Motor/Planetary – Bi–directional hydraulic swing motor mounted to a planetary reducer for 360˚ continuous smooth swing at 1.9 rpm.

Swing Park Brake – 360˚, electric over hydraulic, (spring applied/hydraulic released) multi–disc brake mounted on the speed reducer. Operated by a switch from the operator's cab.

Swing Brake – 360˚, foot operated, hydraulic applied disc brake mounted to the speed reducer.

Swing Lock – Two–position swing lock (boom over front or rear) operated from the operator's cab.

360˚ Positive Swing Lock – Optional – Meets New York City requirement.

Electrical

Swing Alarm – Audio warning device signals when the upper is swinging.

Lights
- Two working lights on front of the cab
- One rotating amber beacon on top of the cab – optional
- One amber strobe beacon on top of the cab – optional
- Boom floodlight – optional

Additional Equipment
- Left side aluminum storage box

Load Hoist System
Load Hoist Performance

Main (Rear) and Auxiliary (Front) Winches – 3/4 in (*19mm*) Rope										
	Maximum Line Pull		Normal Line Speed		High Line Speed		Layer		Total	
Layer	lb	*kg*	ft/min	*m/min*	ft/min	*m/min*	ft	*m*	ft	*m*
1	16,880	*7 656.6*	172	*52.4*	341	*104.0*	114	*34.7*	114	*34.7*
2	15,519	*7 039.3*	187	*57.0*	371	*113.1*	124	*37.8*	238	*72.5*
3	14,362	*6 514.5*	202	*61.6*	401	*122.2*	134	*40.8*	372	*113.4*
4	13,365	*6 062.3*	217	*66.1*	430	*131.1*	144	*43.9*	516	*157.3*
5	12,497	*5 668.5*	232	*70.7*	460	*140.2*	154	*46.9*	670	*204.2*
6	– – –	– – –	– – –	– – –	– – –	– – –	164	*50.0*	834	*254.2*

Wire Rope Application		Diameter		Type	Maximum Permissible Load	
		in	*mm*		lb	*kg*
Main (Rear) Winch	Standard	3/4	*19*	18x19 rotation resistant – right regular lay (Type RB)	12,920	*5 860.5*
	Optional	3/4	*19*	4 strand, low torque, right regular lay (Type GC)	22,400	*10 160.5*
	Optional	3/4	*19*	36x7 rotation resistant – right regular lay (Type ZB)	15,600	*7 076.2*
Auxiliary (Front) Winch	Standard	3/4	*19*	18x19 rotation resistant – right regular lay (Type RB)	12,920	*5 860.5*
	Optional	3/4	*19*	4 strand, low torque, right regular lay (Type GC)	22,400	*10 160.5*
	Optional	3/4	*19*	36x7 rotation resistant – right regular lay (Type ZB)	15,600	*7 076.2*

2M Main and Optional Auxiliary Winches
- Axial piston, full and half displacement (2–speed) motors driven through planetary reduction unit for positive control under all load conditions.
- Grooved lagging
- Power up/down mode of operation
- Hoist drum cable follower – optional
- Drum rotation indicator
- Drum diameter: 16 in (*40.6cm*)
- Rope length:
  - Main: 670 ft (*204.2m*)
  - Auxiliary: 500 ft (*152.4m*) or 670 ft (*204.2m*)
- Maximum rope storage: 834 ft (*254.2m*)
- Terminator style socket and wedge

Third wrap indicator – optional – Visually and audibly warns the operator when the wire rope is on the bottom layer and when the wire rope is down to the last three wraps.

■ Hydraulic System

All circuits of the hydraulic system are pressure compensated.

Counterbalance Valves – All hoist motors, boom extend cylinders, and boom hoist cylinders are equipped with counterbalance valves to provide load lowering and to prevent accidental load drop if hydraulic power is suddenly reduced.

Hydraulic Oil Cooler – One carrier mounted cooler removes heat from the hydraulic oil. The cooler is mounted in left side access ladder.

Boom Hoist Float Valves (Optional) – For transporting the boom over the rear of the crane with a boom dolly. Allows hydraulic oil within the boom hoist cylinder to flow between piston side and case side, allowing the boom to float while on the boom dolly.

Swing Brake Release – For transporting the boom over the rear of the crane with a boom dolly. Holds the 360° swing park brake in the released position allowing free rotation of the upper structure.

■ Counterweight

Standard – Total of 10,800 lb (*4 900kg*) of total counterweight consisting of three, hydraulically removable counterweights. Assembled and disassembled by hydraulic cylinders controlled from the left and right side of the upper structure with capacities for:

- 0 lb (*0kg*) counterweight
- 3,600 lb (*1 635kg*) counterweight
- 7,200 lb (*3 265kg*) counterweight
- 10,800 lb (*4 900kg*) counterweight

Optional – 3,600 lb (*1 635kg*) in addition to standard counterweight for a total of 14,400 lb (*6 530kg*) with additional capacities for:

- 14,400 lb (*6 530kg*) counterweight

Optional – 7,600 lb (*3 447kg*) in addition to standard counterweight for a total of 18,400 lb (*8 345kg*) with additional capacities for:

- 14,400 lb (*6 530kg*) counterweight
- 18,400 lb (*8 345kg*) counterweight*

Low speed jobsite travel is offered for these optional counterweight configurations and a boom dolly or boom trailer may be required for on – highway travel.

* Overall width of the crane increases to 10 ft 5 in (*3.2m*) for this counterweight configuration

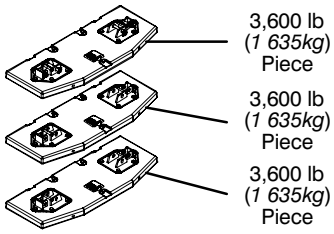

10,800 lb (*4 900kg*)

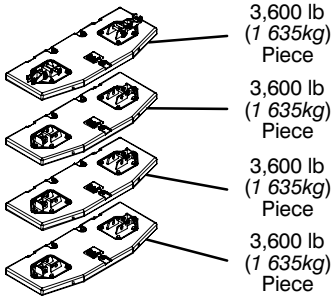

14,400 lb (*6 530kg*)

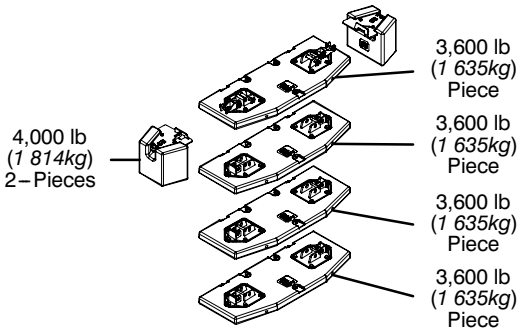

18,400 lb (*8 345kg*)

Counterweight Packages		10,800 lb (*4 900kg*) – Standard				
Counterweight Packages		14,400 (*6 530kg*) – Optional				
		18,400 (*8 345kg*) – Optional				
Counterweight Pieces		3,600 lb (*1 635kg*) Piece	3,600 lb (*1 635kg*) Piece	3,600 lb (*1 635kg*) Piece	3,600 lb (*1 635kg*) Piece	4,000 lb (*1 814kg*) 2-Pieces
Counterweight Configurations	0 lb (*0kg*)					
	3,600 lb (*1 635kg*)	X				
	7,200 lb (*3 265kg*)	X	X			
	10,800 lb (*4 900kg*)	X	X	X		
	14,400 lb (*6 530kg*)	X	X	X	X	
	18,400 lb (*8 345kg*)	X	X	X	X	X

Carrier

General

- 8 ft 6 in (2.6 m) wide
- 23 ft 10 in (*7.26m*) wheelbase (centerline of first axle to centerline of fourth axle)
- **Frame** – Box–type, torsion resistant, welded construction made of high tensile steel. Equipped with front and rear towing and tie–down lugs, tow connections, and access ladders.

Outriggers

Boxes – Two double box, front and rear welded to the carrier frame

Beams and Jacks – Four dual stage beams with Confined Area Lifting Capacities (CALC) provide selectable outrigger extensions of full, intermediate, and retracted positions. Jacks with integral check valves, hydraulically controlled from the operator's cab and on both sides of carrier. A fifth front bumper outrigger with integral check valves is hydraulically controlled from the operator's cab and at the front bumper of carrier.

Pontoons – Four lightweight, stow'n go, 23.5" x 27.25" (*59.7 x 69.2cm*) hexagonal steel pontoons with a contact area of 485 in^2 (*3 129cm^2*) can be stored for road travel in either the storage racks on the carrier or under the outrigger boxes.

Main Jack Reaction – 106,000 lb (*48 080.8kg*) force and 217 psi (*1 496.2kPa*) ground bearing pressure

Steering and Axles

- Sheppard full integral master gear/slave gear steering system provides hydraulic assisted steering with mechanical link between steering wheel and wheels
- **Drive** – 8 x 4 for on/off–highway travel
- **Axle 1 & 2** – Tandem steered, non–driven
- **Axle 3 & 4** – Tandem non–steered, driven with reduction: 6.35 to 1
- **Inter–Axle Differential Lock** – Traction adding device that locks axle 3 with axle 4. Operated by a switch from the carrier cab.

Suspension

Front – Raydan Air Link walking beam air suspension

Rear – Raydan Air Link walking beam air suspension

- **Axle Lift System – Optional** – Improves rear tire ground clearance when the crane is up on outriggers. The rear tandem axles are raised and lowered with a switch in the carrier cab. The axle lift system can be controlled with a switch on both sides of the carrier.

Tires and Wheels

Front – Four (single) 445/65R22.5 tires on aluminum disc wheels

Rear – Eight (dual) 12R22.5 tires on aluminum disc wheels

- Spare tires and wheels – optional
- Tire inflation kit – optional

Brakes

Service – Full air anti–lock (ABS) brakes on all wheel ends. Dual circuit compressed air system with air dryer.

Parking/Emergency – Spring loaded type, acting on 3rd and 4th axles automatically apply when air pressure drops below 40 psi (*275.8kPa*) in both circuits.

Electrical

Battery – Three batteries provide 12 volt starting and operation

Lights

- Front lighting includes two main headlights, two high beam lights, two parking/directional indicators, and three cab marker lights.
- Side lighting includes three parking/directional indicators per side.
- Rear lighting includes two parking/directional indicators, two parking/brake lights, two reverse lights, three marker lights, and a license plate light.
- Other equipment includes hazard/warning system, cab light, instrument panel light, and signal horn.
- One amber strobe beacon on top of the cab – optional
- Daytime running lights – optional

Engine

Specification	Caterpillar C13	
Emissions Compliance Level:	EPA 2007 (1)	Euro III (2)
Maximum Allowable Sulfur Content of Fuel (PPM):	15	5000
Numbers of cylinders:	6	6
Cycle:	4	4
Bore and Stroke: inch (*mm*)	5.12 x 6.18 (*130x157*)	5.12 x 6.18 (*130x157*)
Piston Displacement: in^3 (*L*)	763 (*12.5*)	763 (*12.5*)
Max. Brake Horsepower: hp (*kW*)	445 (*331.8*) @ 1,800 rpm 430 (*320.7*) @ 2,100 rpm	445 (*331.8*) @ 1,800 rpm 430 (*320.7*) @ 2,100 rpm
Peak Torque: ft lb (*Nm*)	1,550 (*2 101.5*) @ 1,200 rpm	1,550 (*2 101.5*) @ 1,200 rpm
Alternator: volts – amps	12 – 135	12 – 135
Crankcase Capacity: qt (*L*)	42.4 (*40.1*)	42.4 (*40.1*)

- Cruise control
- Three–stage engine compression brake
- Thermostatically controlled, hydraulically driven radiator fan
- 120 volt engine block heater
- Ether injection system – optional

(1) Complies with EPA emissions standards effective January 2007.
(2) Complies with EU emissions standards effective January 2000.

Transmission

Automated – ZF AS–TRONIC (no clutch pedal) manual transmission with 12 forward gears and 2 reverse gears.

Carrier Speeds and Gradeability

ZF Astronic		Governed Speed		Gradeability (@ Peak Torque Except Creep @ Idle)
Gear	Ratio	mph	*km/h*	% Grade EPA 2007/Euro III
12th	0.778	62.85	*101.15*	2.28
11th	1.000	48.89	*78.68*	3.38
10th	1.267	38.59	*62.10*	4.61
9th	1.629	30.01	*48.30*	6.23
8th	2.101	23.27	*37.45*	8.31
7th	2.700	18.11	*29.15*	10.91
6th	3.552	13.77	*22.16*	14.60
5th	4.565	10.71	*17.24*	18.97
4th	5.784	8.45	*13.60*	24.22
3rd	7.435	6.58	*10.59*	31.32
2nd	9.590	5.10	*8.21*	40.59
1st	12.326	3.97	*6.39*	52.35
Reverse 1	11.413	4.28	*6.89*	48.43
Reverse 2	8.880	5.51	*8.87*	37.53
Based on a gross vehicle weight of 95,000 lb (*43 091.3kg*)				

Fuel Tank

One 95 gal (*359.6L*) capacity tank

Hydraulic System

All functions are hydraulically powered allowing positive, precise control with independent or simultaneous operation of all functions.

Main Pumps

- Three fixed displacement gear pumps with automatic disconnect for the main and auxiliary winches, swing, boom hoist, control circuit, and telescope for use when pick & carry switch is in travel mode.
- One fixed displacement gear pump for steering and the front bumper outrigger
- Two fixed displacement gear pumps for engine cooling fan and main outriggers. These pumps also provide flow to the winches and boom hoist for “pick & carry” mode. Operated by a switch in the carrier cab.
- Combined pump capacity of 188 gpm (*711.7Lpm*)

Hydraulic Reservoir – 144 gal (*545.1L*) capacity equipped with sight level gauge. Diffusers built in for deaeration.

Filtration – One 10 micron, full flow, return line filter. All oil is filtered prior to return to reservoir. Accessible for easy filter replacement.

Pump Drive

All pumps are mechanically driven by the diesel engine. Main and auxiliary winches, swing, boom hoist, control circuit, and telescope pumps are mounted to an automatic pump disconnect on the rear of the transmission to aid in cold weather starting as well as to reduce pump wear while traveling.

Lower Cab and Controls

Environmental Cab – Fully enclosed, one person cab of composite structure with acoustical insulation. Equipped with:
- Tinted and tempered glass windows
- Roll down left side window for ventilation
- Sliding rear and right side windows for ventilation
- Windshield wiper and washer
- Six way adjustable and air suspended driver's seat with seat belt
- Two adjustable rear view mirrors
- Engine dependent warm–water heater with air ducts for windshield defroster and cab floor
- Adjustable sun visor
- Dome light
- 12 volt connection
- Fire extinguisher

Air Conditioning – Integral with cab heating system utilizing the same ventilation outlets

Cab Instrumentation – Ergonomically positioned analog instrumentation for driving including:
- Speedometer with odometer, hourmeter, trip odometer, and clock
- Front and rear air pressure with warning indicator
- Engine coolant temperature with warning indicator
- Engine oil pressure with warning indicator
- Voltage indicator with warning indicator
- Fuel level
- Tachometer

Right Side Console – Controls and indicators for:
- Transmission gear shifting
- Transmission digital readout
- Cruise controls
- Engine compression brake controls

Dash Mounted Controls For:
- Carrier lights
- Carrier/upper throttle control
- Engine cooling fan override
- Cab heater/air conditioning
- Console dimmer switch
- Anti–lock brake diagnostic switch
- Diesel particulate filter switch
- Park brake
- Pick & carry switch
- Inter–axle differential lock switch
- Rear axle lift system switch – optional

Dash Mounted Indicator For:
- Check, stop, and service engine
- Turn signal indication
- Park brake
- Cruise activation
- High beam headlights
- Check anti–lock brake system
- Check anti–lock trailer brake system
- Diesel particulate filter indication (EPA 2007 Engine Only)
- High exhaust temperature indication (EPA 2007 Engine Only)

Steering Column Controls For:
- Engine ignition
- Warning horn
- Turn indicators
- High beam headlights
- Steering wheel adjustments
- Intermittent windshield wiper and washer
- Hazard lights

Foot Controls For:
- Carrier service brakes
- Engine throttle

Additional Equipment

Standard:
- Aluminum full deck fenders with mud flaps
- Left and right bubble levels
- Air hose connection ports
- Clearance flags

Optional:
- Pneumatic and electrical quick disconnect connectors mounted on the rear for trailer or boom dolly brakes and lights
- Left side aluminum storage box
- Rear mounted pintle hook

Axle Loads

Base crane with full tank of fuel and no counterweight	Gross Vehicle Weight (1)		Front Axles		Rear Axles	
	lb	*kg*	lb	*kg*	lb	*kg*
	74,320	***33 711***	**34,269**	***15 544***	**40,051**	***18 167***
Driver in carrier cab	250	*113*	315	*143*	–65	*–29*
Rear pintle hook	13	*6*	–6	*–3*	19	*8*
Pneumatic and electrical connectors for trailer or boom dolly	11	*5*	–2	*–1*	13	*6*
Carrier aluminum storage box	60	*27*	28	*13*	32	*14*
Air ride lift system – rear axles	47	*21*	0	*0*	47	*21*
Ether injection	5	*2*	6	*3*	–1	*–1*
Hoist drum follower – main	76	*34*	–43	*–19*	119	*54*
Auxiliary winch with 500 ft (*152.4m*) of 3/4” (*19mm*) type “GC” rope	659	*299*	–241	*–109*	900	*408*
Hoist drum follower – auxiliary	76	*34*	–32	*–14*	108	*49*
Substitute 500 ft (*152.4m*) of rope with 670 ft (*204.2m*) of rope – auxiliary	213	*97*	–77	*–35*	290	*132*
Remove 670 ft (*204.2m*) of rope from rear (main) winch	–856	*–388*	439	*199*	–1,295	*–587*
Remove 500 ft (*152.4m*) of rope from front (auxiliary) winch	–643	*–292*	233	*106*	–876	*–397*
Upper storage box	32	*15*	–3	*–1*	35	*16*
Air conditioner – operator’s cab	217	*98*	–15	*–7*	232	*105*
360˚ mechanical swing lock	140	*64*	21	*9*	119	*54*
3,600 lb (*1 635kg*) counterweight on upper – 1 piece	3,652	*1 657*	–1,796	*–815*	5,448	*2 471*
7,200 lb (*3 265kg*) counterweight on upper – 2 pieces	7,304	*3 313*	–3,593	*–1 630*	10,897	*4 943*
10,800 lb (*4 900kg*) counterweight on upper – 3 pieces	10,956	*4 970*	–5,389	*–2 444*	16,345	*7 414*
14,400 lb (*6 530kg*) counterweight on upper – 4 pieces	14,608	*6 626*	–7,185	*–3 259*	21,793	*9 885*
Floodlight to the front of boom base section	9	*4*	10	*4*	–1	*0*
Fly mounting brackets to boom base section for fly options	176	*80*	136	*62*	40	*18*
38 ft (*11.58m*) offsettable fly – stowed	1,671	*758*	1,758	*798*	–87	*–40*
38–64 ft (*11.58–19.51m*) offsettable fly – stowed	2,413	*1 095*	2,191	*994*	222	*101*
Auxiliary lifting sheave	110	*50*	217	*99*	–107	*–49*
40 ton (*36.3mt*) 4–sheave hook block at boom head	900	*408*	1,707	*774*	–807	*–366*
60 ton (*54.4mt*) 4–sheave hook block at boom head	1,109	*503*	2,103	*954*	–994	*–451*
75 ton (*68.0mt*) 5–sheave hook block at boom head	1,406	*638*	2,667	*1 210*	–1,261	*–572*
8.5 ton (*7.7mt*) hook ball at boom head	360	*163*	683	*310*	–323	*–146*
10 ton (*9.1mt*) hook ball at boom head	550	*249*	1,043	*473*	–493	*–224*

Counterweight Load Transfer	Front Axles		Rear Axles	
	lb	*kg*	lb	*kg*
Transfer 3,600 lb (*1 635kg*) counterweight to carrier deck – 1 piece	4,573	*2 074.3*	–4,573	*–2 074.3*
Transfer 7,200 lb (*3 265kg*) counterweight to carrier deck – 2 pieces	9,145	*4 148.1*	–9,145	*–4 148.1*
Transfer 10,800 lb (*4 900kg*) counterweight to carrier deck – 3 pieces	13,718	*6 222.4*	–13,718	*–6 222.4*

Axle	Maximum Load @ 65 mph (*105km/h*)
Front	46,400 lb (*21 047kg*) – aluminum disc wheels with 445/65R22.5 tires
Rear	52,000 lb (*23 587kg*) – aluminum disc wheels with 12R22.5 tires

(1) Adjust gross vehicle weight and axle loading according to component weight. All weights are ±3%.

Axle Loads with 2 – Axle or 3 – Axle Boom Dolly

Base crane with full tank of fuel and no counterweight	Gross Vehicle Weight (1)		Front Axles		Rear Axles		Dolly Axles	
	lb	*kg*	lb	*kg*	lb	*kg*	lb	*kg*
	74,320	*33 711*	27,884	*12 648*	32,943	*14 943*	13,492	*6 120*
Nelson 2 – axle dolly	6,000	*2 721*	0	*0*	0	*0*	6,000	*2 721*
Nelson 3 – axle dolly	7,160	*3 248*	0	*0*	0	*0*	7,160	*3 248*
Driver in carrier cab	250	*113*	315	*143*	– 65	*– 29*	0	*0*
Rear pintle hook	13	*6*	– 6	*– 3*	19	*8*	0	*0*
Pneumatic and electrical connectors for trailer or boom dolly	11	*5*	– 2	*– 1*	13	*6*	0	*0*
Carrier aluminum storage box	60	*27*	28	*13*	32	*14*	0	*0*
Air ride lift system – rear axles	47	*21*	0	*0*	47	*21*	0	*0*
Ether injection	5	*2*	6	*3*	– 1	*– 1*	0	*0*
Hoist drum follower – main	76	*34*	63	*29*	13	*6*	0	*0*
Auxiliary winch with 500 ft (*152.4m*) of 3/4” (*19mm*) type “GC” rope	659	*299*	418	*190*	241	*109*	0	*0*
Hoist drum follower – auxiliary	76	*34*	52	*24*	24	*11*	0	*0*
Substitute 500 ft (*152.4m*) of rope with 670 ft (*204.2m*) of rope – auxiliary	213	*97*	134	*61*	79	*36*	0	*0*
Remove 670 ft (*204.2m*) of rope from rear (main) winch	– 856	*– 388*	– 669	*– 303*	– 187	*– 85*	0	*0*
Remove 500 ft (*152.4m*) of rope from front (auxiliary) winch	– 643	*– 292*	– 406	*– 184*	– 237	*– 108*	0	*0*
Upper storage box	32	*15*	11	*5*	21	*10*	0	*0*
Air conditioner – operator’s cab	217	*98*	73	*33*	144	*65*	0	*0*
360˚ mechanical swing lock	140	*64*	17	*8*	123	*56*	0	*0*
3,600 lb (*1 635kg*) counterweight on upper – 1 piece	3,652	*1 657*	2,776	*1 259*	876	*397*	0	*0*
7,200 lb (*3 265kg*) counterweight on upper – 2 pieces	7,304	*3 313*	5,553	*2 519*	1,751	*794*	0	*0*
10,800 lb (*4 900kg*) counterweight on upper – 3 pieces	10,956	*4 970*	8,329	*3 778*	2,627	*1 192*	0	*0*
14,400 lb (*6 530kg*) counterweight on upper – 4 pieces	14,608	*6 626*	11,106	*5 038*	3,502	*1 589*	0	*0*
Floodlight to the front of boom base section	9	*4*	1	*1*	1	*1*	7	*3*
Fly mounting brackets to boom base section for fly options	176	*80*	30	*14*	30	*14*	116	*53*
38 ft (*11.58m*) offsettable fly – stowed	1,671	*758*	130	*59*	131	*59*	1,410	*640*
38 – 64 ft (*11.58 – 19.51m*) offsettable fly – stowed	2,413	*1 095*	302	*137*	305	*138*	1,806	*819*
Two 16 ft (*4.88m*) lattice inserts (stowed on 3 – axle boom dolly)	3,168	*1 437*	0	*0*	0	*0*	3,168	*1 437*
Auxiliary lifting sheave	110	*50*	– 25	*– 11*	– 25	*– 11*	160	*73*
40 ton (*36.3mt*) 4 – sheave hook block at boom head	900	*408*	– 179	*– 81*	– 180	*– 82*	1,259	*571*
60 ton (*54.4mt*) 4 – sheave hook block at boom head	1,109	*503*	– 220	*– 100*	– 222	*– 101*	1,552	*704*
75 ton (*68.0mt*) 5 – sheave hook block at boom head	1,406	*638*	– 279	*– 127*	– 282	*– 128*	1,967	*892*
8.5 ton (*7.7mt*) hook ball at boom head	360	*163*	– 72	*– 33*	– 72	*– 33*	504	*229*
10 ton (*9.1mt*) hook ball at boom head	550	*249*	– 109	*– 49*	– 110	*– 50*	770	*349*

Counterweight Load Transfer	Front Axles		Rear Axles		Dolly Axles	
	lb	*kg*	lb	*kg*	lb	*kg*
Transfer 3,600 lb (*1 635kg*) counterweight to boom dolly	– 2,776	*– 1 259*	– 876	*– 397*	3,652	*1 657*
Transfer 7,200 lb (*3 265kg*) counterweight to boom dolly	– 5,553	*– 2 519*	– 1,751	*– 794*	7,304	*3 313*
Transfer 10,800 lb (*4 900kg*) counterweight to boom dolly	– 8,329	*– 3 778*	– 2,627	*– 1 192*	10,956	*4 970*
Transfer 14,400 lb (*6 530kg*) counterweight to boom dolly	– 11,106	*– 5 038*	– 3,502	*– 1 589*	14,608	*6 626*

Axle	Maximum Load @ 65 mph (*105km/h*)
Front	46,400 lb (*21 047kg*) – aluminum disc wheels with 445/65R22.5 tires
Rear	52,000 lb (*23 587kg*) – aluminum disc wheels with 12R22.5 tires

(1) Adjust gross vehicle weight and axle loading according to component weight. All weights are ±3%.

General Dimensions

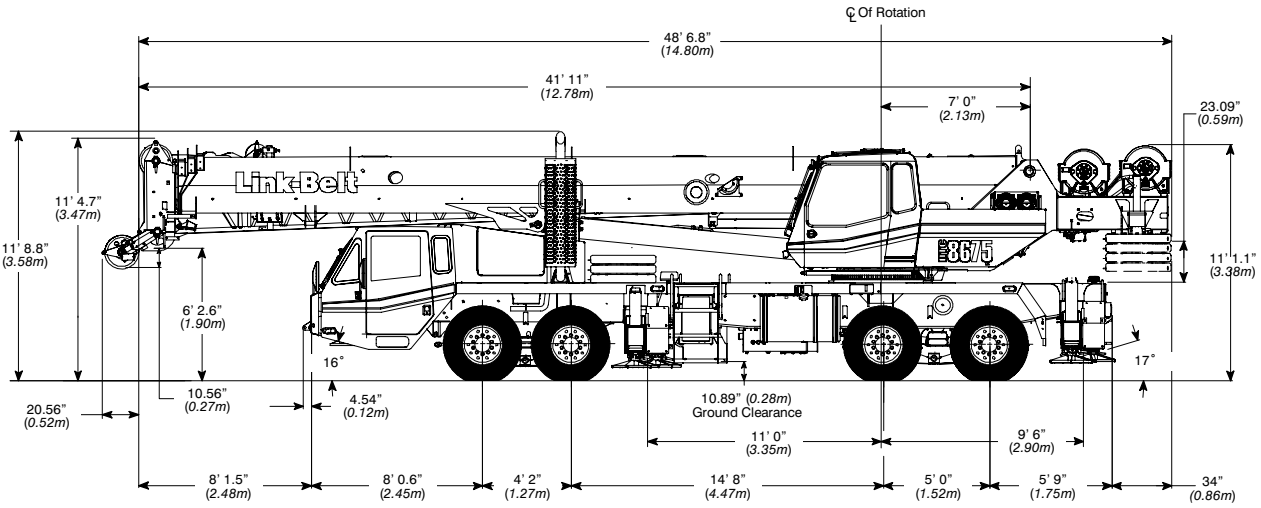

Turning Radius	English	*Metric*
Wall to wall over carrier	48' 4"	*14.7m*
Wall to wall over boom	52' 2"	*15.9m*
Wall to wall over boom attachment	53' 1"	*16.2m*
Curb to curb	44' 1"	*13.4m*
Centerline of tire	43' 4"	*13.2m*

Tail Swing	English	*Metric*
With counterweight	13' 9"	*4.2m*

Overall Width	English	*Metric*
With up to 14,400 lb (*6 530kg*) counterweight	8' 6"	*2.6m*
With 18,400 lb (*8 345kg*) counterweight	10' 4"	*3.1m*

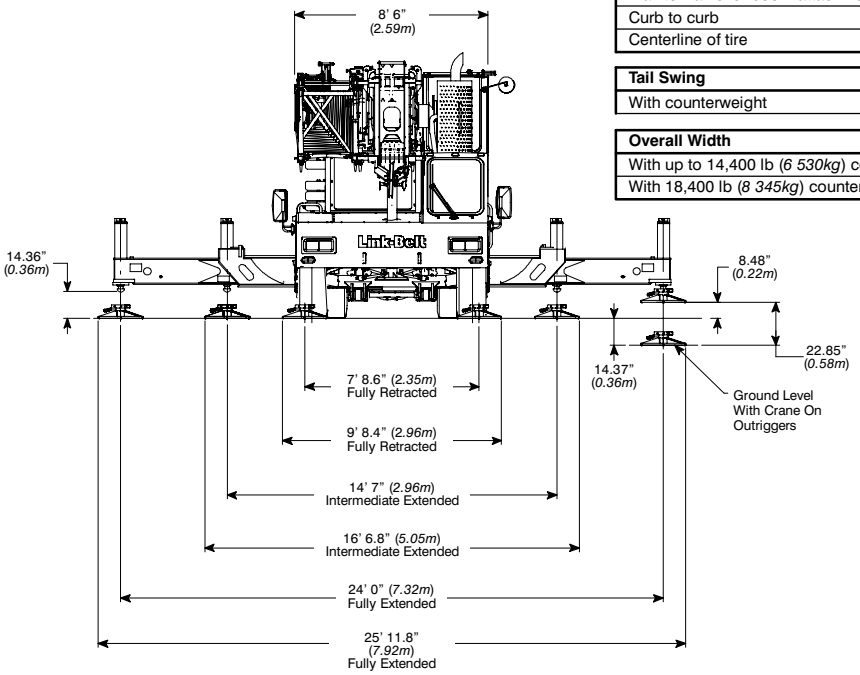

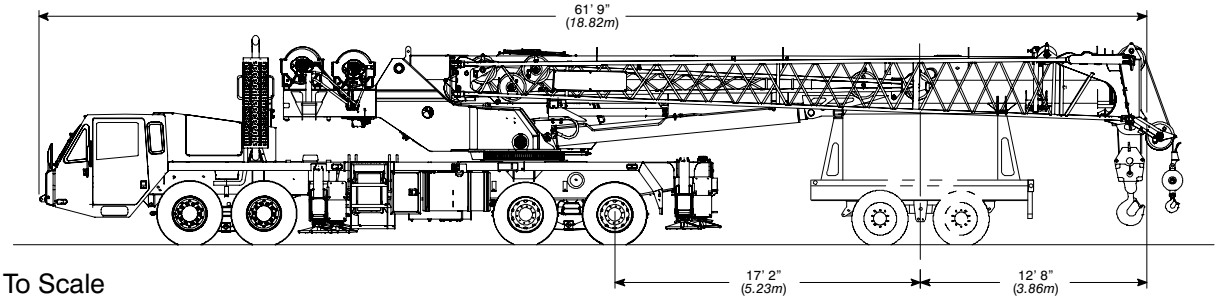

Not To Scale

Working Range Diagram

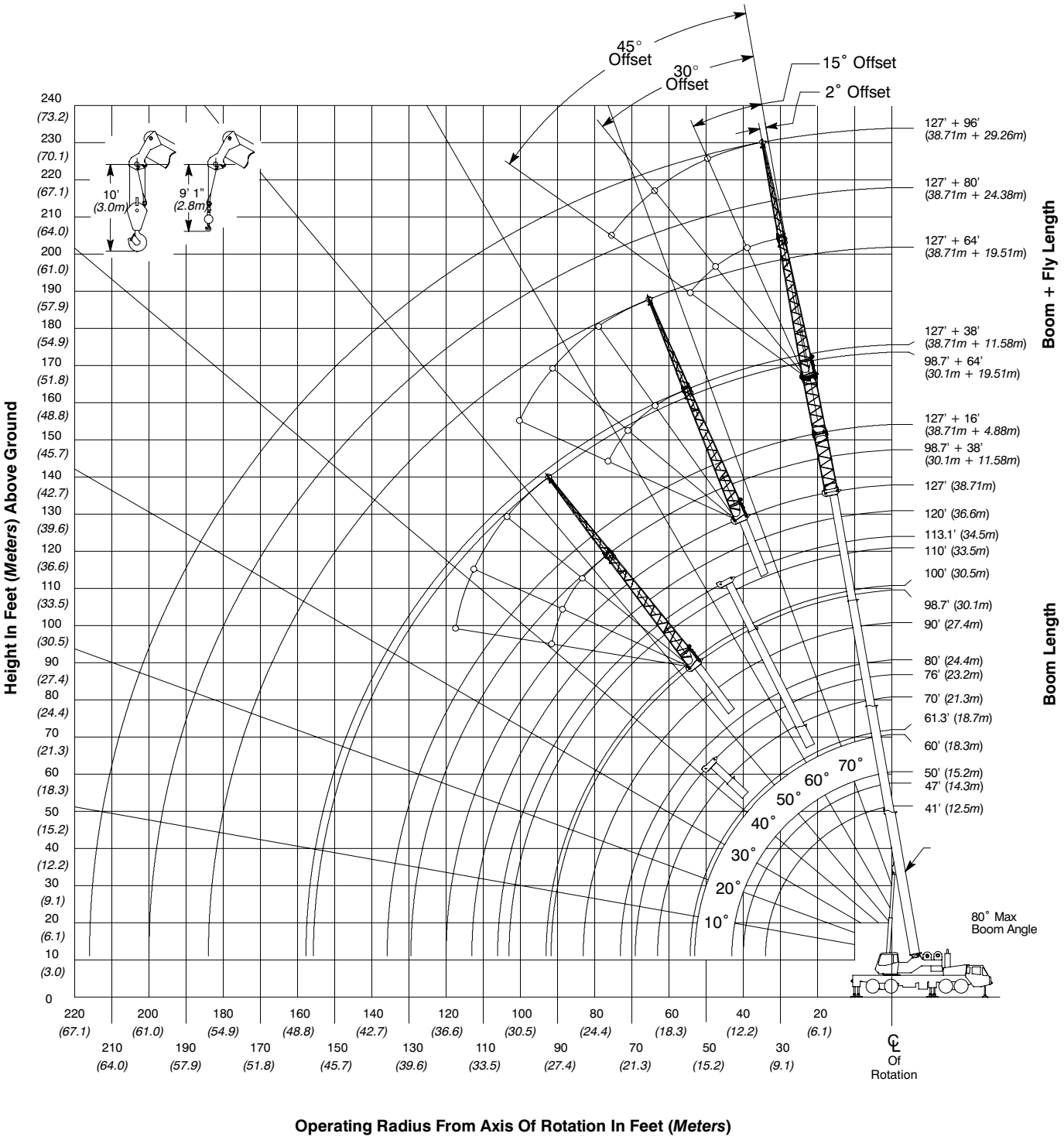

Boom Extend Modes

Boom Length		Section Length		
ft	*m*	T3	T2	T1
50	*15.2*	32%		
60	*18.3*	68%		
70	*21.3*	100%	4%	
80	*24.4*	100%	39%	
90	*27.4*	100%	74%	
100	*30.5*	100%	100%	8%
110	*33.5*	100%	100%	42%
120	*36.6*	100%	100%	76%
127	*38.71*	100%	100%	100%

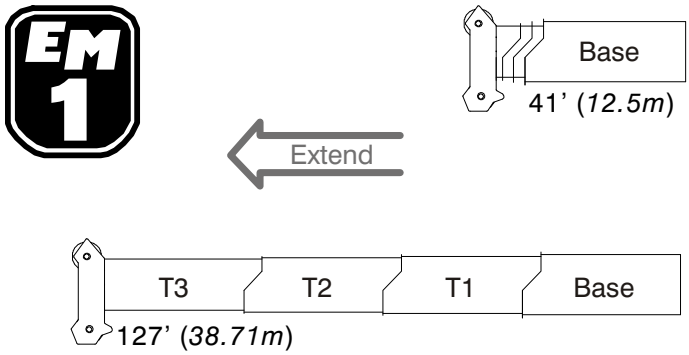

Boom Length		Section Length		
ft	*m*	T3	T2	T1
50	*15.2*	32%		
60	*18.3*	50%	18%	
70	*21.3*	50%	53%	
80	*24.4*	50%	87%	
90	*27.4*	50%	100%	22%
100	*30.5*	50%	100%	56%
113.1	*34.5*	50%	100%	100%

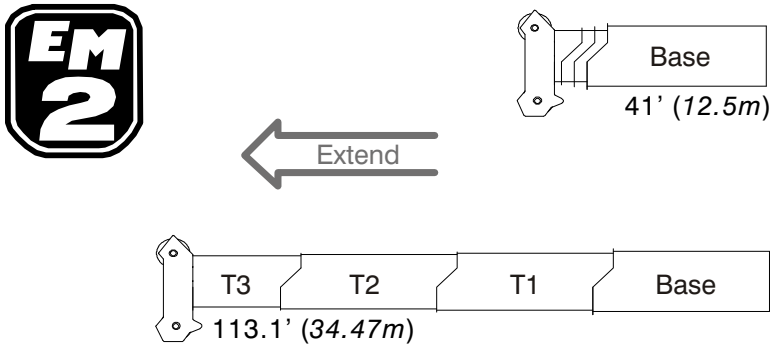

Boom Length		Section Length		
ft	*m*	T3	T2	T1
50	*15.2*	32%		
60	*18.3*	50%	18%	
70	*21.3*	50%	50%	3%
80	*24.4*	50%	50%	37%
90	*27.4*	50%	50%	71%
98.7	*30.1*	50%	50%	100%

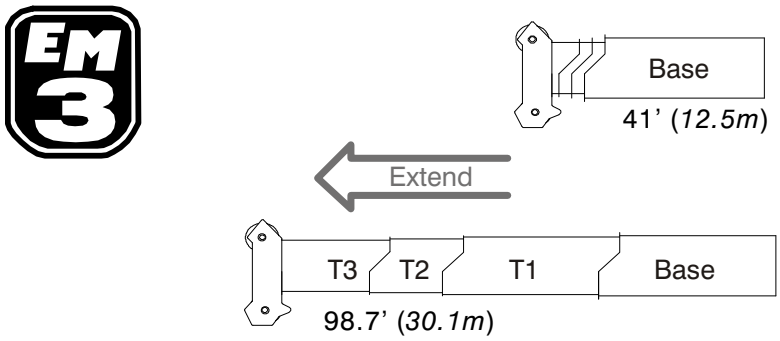

Boom Length		Section Length		
ft	*m*	T3	T2	T1
47	*14.3*	22%		
61.3	*18.7*	22%	50%	
76	*23.2*	22%	50%	50%

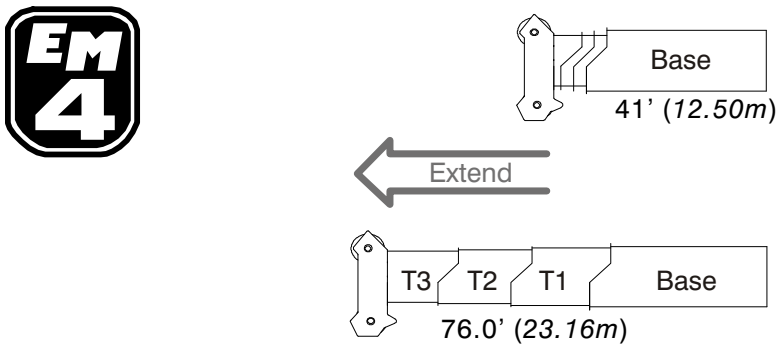

Main Boom Lift Capacity Charts – Standard

0 lb Counterweight – Fully Extended Outriggers – 360˚ Rotation
(All Capacities Are Listed In Pounds)

Radius (ft)	Boom Length (ft)										Radius (ft)
	41	50	60	70	80	90	100	110	120	127	
10	124,900	110,700	106,900	74,400							10
12	102,600	103,900	104,800	81,000	62,800						12
15	79,900	81,300	82,500	77,400	62,800	61,400					15
20	57,100	59,100	59,800	60,700	60,400	57,100	47,900	29,100			20
25	43,300	45,300	46,400	46,900	46,700	46,500	42,500	32,800	25,500	22,600	25
30	30,600	33,100	34,600	34,800	35,100	34,300	34,800	32,100	25,500	22,600	30
35		24,600	26,100	26,300	27,400	27,700	26,400	26,600	25,500	22,600	35
40		18,600	20,200	21,100	21,400	21,600	21,700	21,400	21,100	20,900	40
45			16,000	16,900	17,200	17,400	17,400	17,100	16,900	16,700	45
50			12,800	13,800	14,100	14,200	14,300	14,000	13,700	13,600	50
55				11,400	11,700	11,900	12,000	11,700	11,500	11,300	55
60				9,500	9,800	10,000	10,100	9,800	9,600	9,500	60
65				6,400	8,300	8,500	8,500	8,300	8,000	7,900	65
70					6,900	7,200	7,200	7,000	6,800	6,600	70
75						6,100	6,200	5,900	5,700	5,600	75
80						5,100	5,200	5,000	4,800	4,700	80
85							4,400	4,200	4,000	3,900	85
90							3,700	3,500	3,300	3,200	90
95								2,900	2,700	2,600	95
100								2,300	2,200	2,100	100
105								1,000	1,700	1,600	105
110									1,300	1,200	110
115										800	115

This information is not for crane operation. Operator must refer to the in – cab information for crane operation. Rated lifting capacities shown on fully extended outriggers do not exceed 85% of the tipping loads and on tires do not exceed 75% of the tipping loads.

0 lb Counterweight -- On Tires -- Stationary -- Boom Centered Over Rear
(All Capacities Are Listed In Pounds)

Radius (ft)	Boom Length (ft)						Radius (ft)
	41	50	60	70	80	90	
10	33,800						10
12	30,600	31,500	26,500				12
15	23,500	25,400	26,500	20,300			15
20	14,100	15,900	17,200	17,900	16,600		20
25	8,900	10,600	11,800	12,700	12,800	13,000	25
30	5,500	7,200	8,400	9,200	9,500	9,700	30
35		4,800	6,000	6,800	7,100	7,300	35
40		3,100	4,300	5,000	5,300	5,500	40
45			2,900	3,700	3,900	4,100	45
50			1,900	2,600	2,900	3,100	50
55				1,700	2,000	2,200	55
60				1,000	1,300	1,500	60

0 lb Counterweight -- On Tires -- Pick & Carry (1 mph) -- Boom Centered Over Rear
(All Capacities Are Listed In Pounds)

Radius (ft)	Boom Length (ft)						Radius (ft)
	41	50	60	70	80	90	
10	23,900						10
12	21,300	22,200	22,900				12
15	18,100	19,100	19,900	20,300			15
20	14,000	15,100	15,900	16,400	16,600		20
25	8,900	10,600	11,800	12,700	12,800	13,000	25
30	5,500	7,200	8,400	9,200	9,500	9,700	30
35		4,800	6,000	6,800	7,100	7,300	35
40		3,100	4,300	5,000	5,300	5,500	40
45			2,900	3,700	3,900	4,100	45
50			1,900	2,600	2,900	3,100	50
55				1,700	2,000	2,200	55
60				1,000	1,300	1,500	60

This information is not for crane operation. Operator must refer to the in – cab information for crane operation. Rated lifting capacities shown on fully extended outriggers do not exceed 85% of the tipping loads and on tires do not exceed 75% of the tipping loads.

10,800 lb Counterweight -- Fully Extended Outriggers -- 360° Rotation
(All Capacities Are Listed In Pounds)

Radius (ft)	Boom Length (ft)										Radius (ft)
	41	50	60	70	80	90	100	110	120	127	
10	137,100	110,700	106,900	74,400							10
12	113,100	105,000	106,900	81,000	62,800						12
15	88,500	89,900	90,900	77,400	62,800	61,400					15
20	63,600	65,500	66,100	66,000	62,800	57,100	47,900	29,100			20
25	48,500	50,400	51,400	52,000	51,700	49,900	42,500	32,800	25,500	22,600	25
30	38,300	40,300	41,400	41,900	41,700	41,600	38,100	32,100	25,500	22,600	30
35		32,700	33,900	34,400	34,100	33,900	33,800	29,200	25,500	22,600	35
40		25,800	27,400	27,600	27,900	27,800	27,600	26,700	25,000	22,600	40
45			22,400	22,700	23,200	23,100	22,800	22,500	23,200	22,600	45
50			18,600	19,600	19,900	20,100	19,700	19,800	19,600	19,500	50
55				16,600	16,900	17,000	17,100	16,800	16,600	16,400	55
60				14,100	14,400	14,600	14,600	14,400	14,100	14,000	60
65				10,600	12,500	12,700	12,700	12,500	12,300	12,100	65
70					10,800	11,100	11,100	10,800	10,600	10,500	70
75						9,600	9,700	9,500	9,300	9,100	75
80						8,400	8,500	8,300	8,100	8,000	80
85							7,500	7,300	7,100	7,000	85
90							6,600	6,400	6,200	6,100	90
95								5,600	5,400	5,300	95
100								4,900	4,700	4,600	100
105								3,400	4,100	4,000	105
110									3,500	3,400	110
115										2,900	115

This information is not for crane operation. Operator must refer to the in – cab information for crane operation. Rated lifting capacities shown on fully extended outriggers do not exceed 85% of the tipping loads and on tires do not exceed 75% of the tipping loads.

10,800 lb Counterweight -- On Tires -- Stationary -- Boom Centered Over Rear
(All Capacities Are Listed In Pounds)

Radius (ft)	Boom Length (ft)						Radius (ft)
	41	50	60	70	80	90	
10	33,700						10
12	30,500	31,400	32,000				12
15	26,500	27,500	28,100	23,600			15
20	20,800	22,300	23,100	23,600	18,000		20
25	14,100	15,800	17,000	17,800	18,000	13,900	25
30	9,800	11,500	12,700	13,400	13,700	13,900	30
35		8,500	9,600	10,400	10,700	10,900	35
40		6,200	7,400	8,200	8,400	8,600	40
45			5,700	6,400	6,700	6,900	45
50			4,300	5,100	5,300	5,500	50
55				4,000	4,200	4,400	55
60				3,100	3,300	3,500	60
65					2,600	2,800	65
70					1,900	2,100	70
75						1,600	75
80						1,100	80

10,800 lb Counterweight -- On Tires -- Pick & Carry (1 mph) -- Boom Centered Over Rear
(All Capacities Are Listed In Pounds)

Radius (ft)	Boom Length (ft)						Radius (ft)
	41	50	60	70	80	90	
10	23,700						10
12	21,300	22,200	22,700				12
15	18,100	19,100	19,800	20,200			15
20	14,000	15,100	15,900	16,400	16,500		20
25	10,800	12,000	12,800	13,400	13,600	13,700	25
30	8,300	9,600	10,500	11,100	11,300	11,500	30
35		7,600	8,600	9,200	9,400	9,600	35
40		5,900	7,000	7,600	7,900	8,100	40
45			5,600	6,300	6,600	6,800	45
50			4,300	5,100	5,300	5,500	50
55				4,000	4,200	4,400	55
60				3,100	3,300	3,500	60
65					2,600	2,800	65
70					1,900	2,100	70
75						1,600	75
80						1,100	80

This information is not for crane operation. Operator must refer to the in – cab information for crane operation. Rated lifting capacities shown on fully extended outriggers do not exceed 85% of the tipping loads and on tires do not exceed 75% of the tipping loads.

Main Boom Lift Capacity Charts – Optional

14,400 lb Counterweight -- Fully Extended Outriggers -- 360° Rotation
(All Capacities Are Listed In Pounds)

Radius (ft)	Boom Length (ft)										Radius (ft)
	41	50	60	70	80	90	100	110	120	127	
9	150,000										9
10	140,500	110,700	106,900	74,400							10
12	116,600	105,000	106,900	81,000	62,800						12
15	91,300	92,600	93,700	77,400	62,800	61,400					15
20	65,700	67,600	68,300	68,100	62,800	57,100	47,900	29,100			20
25	50,200	52,100	52,800	53,700	53,400	49,900	42,500	32,800	25,500	22,600	25
30	39,700	41,700	42,800	43,300	43,100	43,000	38,100	32,100	25,500	22,600	30
35		34,300	35,400	35,900	35,800	35,700	34,300	29,200	25,500	22,600	35
40		28,000	29,500	29,700	29,500	29,300	29,100	26,700	25,000	22,600	40
45			24,300	24,600	24,900	24,900	24,700	24,400	23,200	22,600	45
50			20,300	20,600	21,500	21,200	20,700	20,900	21,300	21,000	50
55				18,100	18,400	18,600	18,200	18,400	18,200	18,000	55
60				15,600	15,900	16,200	16,200	15,900	15,700	15,500	60
65				12,000	13,800	14,000	14,100	13,800	13,600	13,400	65
70					12,100	12,300	12,400	12,100	11,900	11,800	70
75						10,800	10,900	10,700	10,400	10,300	75
80						9,500	9,600	9,400	9,200	9,100	80
85							8,500	8,300	8,100	8,000	85
90							7,500	7,300	7,200	7,000	90
95								6,500	6,300	6,200	95
100								5,700	5,600	5,500	100
105								4,200	4,900	4,800	105
110									4,300	4,200	110
115										3,700	115

This information is not for crane operation. Operator must refer to the in – cab information for crane operation. Rated lifting capacities shown on fully extended outriggers do not exceed 85% of the tipping loads and on tires do not exceed 75% of the tipping loads.

14,400 lb Counterweight -- On Tires -- Stationary -- Boom Centered Over Rear
(All Capacities Are Listed In Pounds)

Radius (ft)	Boom Length (ft)						Radius (ft)
	41	50	60	70	80	90	
10	33,700						10
12	30,500	31,400	31,900				12
15	26,500	27,400	28,100	23,600			15
20	21,200	22,300	23,100	23,600	19,800		20
25	15,900	17,500	18,800	19,600	19,800	15,300	25
30	11,300	12,900	14,100	14,800	15,100	15,300	30
35		9,700	10,900	11,600	11,900	12,100	35
40		7,300	8,500	9,200	9,500	9,700	40
45			6,600	7,400	7,600	7,800	45
50			5,200	5,900	6,200	6,400	50
55				4,700	5,000	5,200	55
60				3,800	4,000	4,200	60
65					3,200	3,400	65
70					2,500	2,700	70
75						2,100	75
80						1,600	80

14,400 lb Counterweight -- On Tires -- Pick & Carry (1 mph) -- Boom Centered Over Rear
(All Capacities Are Listed In Pounds)

Radius (ft)	Boom Length (ft)						Radius (ft)
	41	50	60	70	80	90	
10	23,500						10
12	21,200	22,000	22,400				12
15	18,100	19,100	19,700	20,100			15
20	14,000	15,100	15,900	16,400	16,500		20
25	10,800	12,000	12,800	13,400	13,600	13,700	25
30	8,300	9,600	10,500	11,100	11,300	11,500	30
35		7,600	8,600	9,200	9,400	9,600	35
40		5,900	7,000	7,600	7,900	8,100	40
45			5,600	6,300	6,600	6,800	45
50			4,500	5,200	5,500	5,600	50
55				4,200	4,500	4,700	55
60				3,400	3,700	3,900	60
65					2,900	3,100	65
70					2,300	2,500	70
75						1,900	75
80						1,400	80

This information is not for crane operation. Operator must refer to the in – cab information for crane operation. Rated lifting capacities shown on fully extended outriggers do not exceed 85% of the tipping loads and on tires do not exceed 75% of the tipping loads.

18,400 lb Counterweight -- Fully Extended Outriggers -- 360° Rotation
(All Capacities Are Listed In Pounds)

Radius (ft)	Boom Length (ft)										Radius (ft)
	41	50	60	70	80	90	100	110	120	127	
9	150,000										9
10	140,500	110,700	106,900	74,400							10
12	120,500	105,000	106,900	81,000	62,800						12
15	94,400	95,800	96,800	77,400	62,800	61,400					15
20	68,000	69,900	70,600	70,400	62,800	57,100	47,900	29,100			20
25	52,000	54,000	54,700	54,900	55,300	49,900	42,500	32,800	25,500	22,600	25
30	41,300	43,300	44,400	44,900	44,700	44,100	38,100	32,100	25,500	22,600	30
35		35,600	36,700	37,300	37,100	37,000	34,300	29,200	25,500	22,600	35
40		29,800	31,000	31,500	31,300	31,200	31,100	26,700	25,000	22,600	40
45			26,300	26,600	26,300	26,100	26,600	24,500	23,200	22,600	45
50			22,100	22,400	22,800	22,700	22,500	22,300	21,600	21,000	50
55				19,100	20,000	19,600	19,300	19,400	19,800	19,400	55
60				17,000	17,400	17,600	16,900	17,400	17,200	17,000	60
65				13,400	15,200	15,400	15,500	15,200	15,000	14,900	65
70					13,300	13,600	13,600	13,400	13,200	13,100	70
75						12,100	12,200	11,900	11,700	11,600	75
80						10,700	10,800	10,600	10,400	10,300	80
85							9,600	9,400	9,200	9,100	85
90							8,600	8,400	8,200	8,100	90
95								7,500	7,300	7,200	95
100								6,700	6,500	6,400	100
105								5,100	5,800	5,700	105
110									5,100	5,000	110
115										4,500	115

This information is not for crane operation. Operator must refer to the in – cab information for crane operation. Rated lifting capacities shown on fully extended outriggers do not exceed 85% of the tipping loads and on tires do not exceed 75% of the tipping loads.

18,400 lb Counterweight -- On Tires -- Stationary -- Boom Centered Over Rear
(All Capacities Are Listed In Pounds)

Radius (ft)	Boom Length (ft)						Radius (ft)
	41	50	60	70	80	90	
10	32,800						10
12	29,800	30,600	31,100				12
15	25,900	26,800	27,500	27,900			15
20	20,700	21,800	22,600	23,100	18,900		20
25	16,700	17,900	18,800	19,300	18,900	16,000	25
30	12,800	14,400	15,600	16,300	16,500	16,000	30
35		11,000	12,200	12,900	13,100	13,300	35
40		8,400	9,600	10,400	10,600	10,800	40
45			7,600	8,400	8,700	8,900	45
50			6,100	6,800	7,100	7,300	50
55				5,600	5,800	6,000	55
60				4,500	4,800	5,000	60
65					3,900	4,100	65
70					3,100	3,300	70
75						2,700	75
80						2,100	80

18,400 lb Counterweight -- On Tires -- Pick & Carry (1 mph) -- Boom Centered Over Rear
(All Capacities Are Listed In Pounds)

Radius (ft)	Boom Length (ft)						Radius (ft)
	41	50	60	70	80	90	
10	23,700						10
12	20,200	21,800	22,600				12
15	17,500	18,400	18,900	19,100			15
20	13,500	14,500	15,300	15,800	15,900		20
25	10,400	11,600	12,400	12,900	13,100	13,200	25
30	7,900	9,200	10,100	10,700	10,900	11,100	30
35		7,200	8,200	8,900	9,100	9,200	35
40		5,600	6,700	7,300	7,600	7,700	40
45			5,300	6,000	6,300	6,500	45
50			4,200	4,900	5,200	5,400	50
55				4,000	4,200	4,400	55
60				3,200	3,400	3,600	60
65					2,700	2,900	65
70					2,100	2,300	70
75						1,700	75
80						1,200	80

This information is not for crane operation. Operator must refer to the in – cab information for crane operation. Rated lifting capacities shown on fully extended outriggers do not exceed 85% of the tipping loads and on tires do not exceed 75% of the tipping loads.

Fly Attachment Lift Capacity Charts – Optional

0 lb Counterweight – Fully Extended Outriggers – 360˚ Rotation (All Capacities Are Listed In Pounds)					
98.7 ft Main Boom Length – 38 ft Offset Fly Length					
Radius (ft)	2˚ Fly Offset	15˚ Fly Offset	30˚ Fly Offset	45˚ Fly Offset	Radius (ft)
30	16,200				30
35	15,600				35
40	14,900	12,500			40
45	14,300	12,000	10,100		45
50	13,600	11,500	9,800		50
55	11,900	11,100	9,500	8,600	55
60	9,900	10,700	9,300	8,400	60
65	8,300	9,100	9,000	8,300	65
70	7,000	7,700	8,400	8,100	70
75	5,900	6,600	7,200	7,700	75
80	5,000	5,500	6,100	6,500	80
85	4,200	4,700	5,200	5,500	85
90	3,500	3,900	4,300	4,600	90
95	2,900	3,300	3,600	3,800	95
100	2,300	2,700	3,000	3,100	100
105	1,900	2,100	2,400	2,500	105
110	1,400	1,700	1,900		110
115	1,000	1,200	1,400		115

This information is not for crane operation. Operator must refer to the in – cab information for crane operation. Rated lifting capacities shown on fully extended outriggers do not exceed 85% of the tipping loads and on tires do not exceed 75% of the tipping loads.

0 lb Counterweight – Fully Extended Outriggers – 360˚ Rotation (All Capacities Are Listed In Pounds)					
127 ft Main Boom Length – 38 ft Offset Fly Length					
Radius (ft)	2˚ Fly Offset	15˚ Fly Offset	30˚ Fly Offset	45˚ Fly Offset	Radius (ft)
35	10,900				35
40	10,900				40
45	10,900	10,400			45
50	10,900	10,300			50
55	10,900	10,100	9,100		55
60	10,200	9,900	8,900		60
65	8,600	9,400	8,700	8,100	65
70	7,300	8,000	8,600	8,000	70
75	6,200	6,800	7,500	7,900	75
80	5,200	5,800	6,400	6,900	80
85	4,400	5,000	5,500	5,900	85
90	3,700	4,200	4,700	5,000	90
95	3,100	3,500	4,000	4,300	95
100	2,600	3,000	3,300	3,600	100
105	2,100	2,400	2,800	3,000	105
110	1,600	2,000	2,300	2,500	110
115	1,200	1,500	1,800	2,000	115
120		1,100	1,400	1,500	120
125			1,000	1,100	125

This information is not for crane operation. Operator must refer to the in–cab information for crane operation. Rated lifting capacities shown on fully extended outriggers do not exceed 85% of the tipping loads and on tires do not exceed 75% of the tipping loads.

10,800 lb Counterweight -- Fully Extended Outriggers -- 360˚ Rotation (All Capacities Are Listed In Pounds)					
98.7 ft Main Boom Length 2˚ Fly Offset			98.7 ft Main Boom Length 15˚ Fly Offset		
Radius (ft)	Fly Length (ft)		Radius (ft)	Fly Length (ft)	
	38	64		38	64
30	16,200		30		
35	15,600	10,300	35		
40	14,900	9,900	40	12,500	
45	14,300	9,400	45	12,000	
50	13,600	9,000	50	11,500	7,400
55	13,000	8,500	55	11,100	7,000
60	12,500	8,100	60	10,700	6,700
65	11,900	7,700	65	10,300	6,400
70	10,900	7,300	70	10,000	6,200
75	9,500	7,000	75	9,700	5,900
80	8,300	6,700	80	8,800	5,700
85	7,300	6,400	85	7,800	5,500
90	6,400	6,100	90	6,800	5,300
95	5,600	5,800	95	6,000	5,100
100	4,900	5,600	100	5,200	5,000
105	4,300	5,100	105	4,600	4,800
110	3,700	4,500	110	4,000	4,700
115	3,200	4,000	115	3,400	4,500
120	2,800	3,600	120	2,900	4,000
125	2,300	3,100	125	2,400	3,500
130		2,700	130		3,100
135		2,400	135		2,700
140		2,100	140		2,300
145		1,800	145		2,000
150		1,500	150		1,600
155		1,200	155		

This information is not for crane operation. Operator must refer to the in – cab information for crane operation. Rated lifting capacities shown on fully extended outriggers do not exceed 85% of the tipping loads and on tires do not exceed 75% of the tipping loads.

10,800 lb Counterweight -- Fully Extended Outriggers -- 360˚ Rotation (All Capacities Are Listed In Pounds)					
98.7 ft Main Boom Length 30˚ Fly Offset			98.7 ft Main Boom Length 45˚ Fly Offset		
Radius (ft)	Fly Length (ft)		Radius (ft)	Fly Length (ft)	
	38	64		38	64
45	10,100		45		
50	9,800		50		
55	9,500		55	8,600	
60	9,300		60	8,400	
65	9,000	5,400	65	8,300	
70	8,800	5,200	70	8,100	
75	8,600	5,100	75	8,000	
80	8,500	4,900	80	7,900	4,400
85	8,200	4,800	85	7,800	4,300
90	7,200	4,700	90	7,500	4,300
95	6,300	4,600	95	6,500	4,200
100	5,500	4,500	100	5,700	4,200
105	4,800	4,400	105	4,900	4,100
110	4,200	4,300	110		4,100
115	3,600	4,200	115		4,100
120		4,200	120		4,100
125		3,900	125		4,100
130		3,400	130		3,500
135		2,900	135		3,000
140		2,500	140		
145		2,100	145		

This information is not for crane operation. Operator must refer to the in – cab information for crane operation. Rated lifting capacities shown on fully extended outriggers do not exceed 85% of the tipping loads and on tires do not exceed 75% of the tipping loads.

10,800 lb Counterweight -- Fully Extended Outriggers -- 360° Rotation
(All Capacities Are Listed In Pounds)

127 ft Main Boom Length 2° Fly Offset				127 ft Main Boom Length 15° Fly Offset			
Radius (ft)	Fly Length (ft)			Radius (ft)	Fly Length (ft)		
	38	64	80		38	64	80
35	10,900			35			
40	10,900			40			
45	10,900	7,300		45	10,400		
50	10,900	7,300	5,800	50	10,300		
55	10,900	7,200	5,800	55	10,100		
60	10,900	7,100	5,800	60	9,900		
65	10,700	6,900	5,800	65	9,700	6,100	5,600
70	10,500	6,800	5,800	70	9,500	6,000	5,300
75	9,700	6,600	5,800	75	9,300	5,800	5,000
80	8,500	6,500	5,500	80	9,000	5,600	4,700
85	7,500	6,300	5,200	85	8,000	5,500	4,400
90	6,600	6,100	4,900	90	7,100	5,300	4,200
95	5,800	5,900	4,600	95	6,200	5,200	4,000
100	5,100	5,700	4,400	100	5,500	5,100	3,800
105	4,500	5,100	4,200	105	4,800	4,900	3,600
110	3,900	4,500	4,000	110	4,200	4,700	3,500
115	3,400	4,000	3,800	115	3,700	4,500	3,300
120	3,000	3,500	3,400	120	3,200	4,000	3,200
125	2,500	3,100	2,900	125	2,800	3,600	3,000
130	2,200	2,700	2,500	130	2,400	3,100	2,900
135	1,800	2,300	2,200	135	2,000	2,700	2,600
140	1,500	2,000	1,900	140	1,600	2,400	2,200
145	1,200	1,700	1,500	145	1,300	2,000	1,900
150		1,400	1,300	150	1,000	1,700	1,600
155		1,200	1,000	155		1,400	1,300
160				160		1,200	1,000

This information is not for crane operation. Operator must refer to the in – cab information for crane operation. Rated lifting capacities shown on fully extended outriggers do not exceed 85% of the tipping loads and on tires do not exceed 75% of the tipping loads.

10,800 lb Counterweight -- Fully Extended Outriggers -- 360˚ Rotation (All Capacities Are Listed In Pounds)							
127 ft Main Boom Length 30˚ Fly Offset				127 ft Main Boom Length 45˚ Fly Offset			
Radius (ft)	Fly Length (ft)			Radius (ft)	Fly Length (ft)		
	38	64	80		38	64	80
55	9,100			55			
60	8,900			60			
65	8,700			65	8,100		
70	8,600			70	8,000		
75	8,500			75	7,900		
80	8,300	4,900	3,900	80	7,700		
85	8,000	4,800	3,700	85	7,700		
90	7,500	4,700	3,500	90	7,400	4,200	3,100
95	6,700	4,600	3,400	95	7,000	4,200	2,900
100	5,900	4,500	3,200	100	6,100	4,100	2,800
105	5,200	4,400	3,100	105	5,400	4,100	2,700
110	4,500	4,300	2,900	110	4,700	4,100	2,600
115	4,000	4,200	2,800	115	4,100	4,000	2,500
120	3,500	4,000	2,700	120	3,600	3,900	2,500
125	3,000	3,900	2,600	125	3,100	3,800	2,400
130	2,500	3,600	2,500	130		3,600	2,300
135	2,100	3,100	2,500	135		3,400	2,300
140	1,700	2,700	2,400	140		2,900	2,200
145	1,400	2,300	2,300	145		2,500	2,200
150		2,000	1,900	150		2,100	2,100
155		1,700	1,600	155		1,700	1,800
160		1,300	1,300	160		1,400	1,400
165		1,000	1,000	165			1,100

This information is not for crane operation. Operator must refer to the in – cab information for crane operation. Rated lifting capacities shown on fully extended outriggers do not exceed 85% of the tipping loads and on tires do not exceed 75% of the tipping loads.

14,400 lb Counterweight -- Fully Extended Outriggers -- 360˚ Rotation (All Capacities Are Listed In Pounds)					
98.7 ft Main Boom Length 2˚ Fly Offset			98.7 ft Main Boom Length 15˚ Fly Offset		
Radius (ft)	Fly Length (ft)		Radius (ft)	Fly Length (ft)	
	38	64		38	64
30	16,200		30		
35	15,600	10,300	35		
40	14,900	9,900	40	12,500	
45	14,300	9,400	45	12,000	
50	13,600	9,000	50	11,500	7,400
55	13,000	8,500	55	11,100	7,000
60	12,500	8,100	60	10,700	6,700
65	11,900	7,700	65	10,300	6,400
70	11,400	7,300	70	10,000	6,200
75	10,700	7,000	75	9,700	5,900
80	9,400	6,700	80	9,400	5,700
85	8,300	6,400	85	8,800	5,500
90	7,300	6,100	90	7,800	5,300
95	6,500	5,800	95	6,900	5,100
100	5,700	5,600	100	6,100	5,000
105	5,100	5,400	105	5,400	4,800
110	4,500	5,200	110	4,700	4,700
115	3,900	4,700	115	4,100	4,600
120	3,400	4,200	120	3,600	4,500
125	3,000	3,800	125	3,100	4,200
130		3,400	130		3,700
135		3,000	135		3,300
140		2,600	140		2,900
145		2,300	145		2,500
150		2,000	150		2,200
155		1,800	155		

This information is not for crane operation. Operator must refer to the in – cab information for crane operation. Rated lifting capacities shown on fully extended outriggers do not exceed 85% of the tipping loads and on tires do not exceed 75% of the tipping loads.

14,400 lb Counterweight -- Fully Extended Outriggers -- 360˚ Rotation (All Capacities Are Listed In Pounds)					
98.7 ft Main Boom Length 30˚ Fly Offset			98.7 ft Main Boom Length 45˚ Fly Offset		
Radius (ft)	Fly Length (ft)		Radius (ft)	Fly Length (ft)	
	38	64		38	64
45	10,100		45		
50	9,800		50		
55	9,500		55	8,600	
60	9,300		60	8,400	
65	9,000	5,400	65	8,300	
70	8,800	5,200	70	8,100	
75	8,600	5,100	75	8,000	
80	8,500	4,900	80	7,900	4,400
85	8,300	4,800	85	7,800	4,300
90	8,200	4,700	90	7,700	4,300
95	7,200	4,600	95	7,400	4,200
100	6,400	4,500	100	6,500	4,200
105	5,600	4,400	105	5,700	4,100
110	4,900	4,300	110		4,100
115	4,300	4,200	115		4,100
120		4,200	120		4,100
125		4,100	125		4,100
130		4,000	130		4,100
135		3,500	135		3,600
140		3,100	140		
145		2,600	145		

This information is not for crane operation. Operator must refer to the in – cab information for crane operation. Rated lifting capacities shown on fully extended outriggers do not exceed 85% of the tipping loads and on tires do not exceed 75% of the tipping loads.

14,400 lb Counterweight -- Fully Extended Outriggers -- 360˚ Rotation
(All Capacities Are Listed In Pounds)

127 ft Main Boom Length 2˚ Fly Offset					127 ft Main Boom Length 15˚ Fly Offset				
Radius (ft)	Fly Length (ft)				Radius (ft)	Fly Length (ft)			
	38	64	80	96		38	64	80	96
35	10,900				35				
40	10,900				40				
45	10,900	7,300			45	10,400			
50	10,900	7,300	5,800		50	10,300			
55	10,900	7,200	5,800	4,500	55	10,100			
60	10,900	7,100	5,800	4,500	60	9,900			
65	10,700	6,900	5,800	4,500	65	9,700	6,100	5,600	
70	10,500	6,800	5,800	4,500	70	9,500	6,000	5,300	4,200
75	10,200	6,600	5,800	4,500	75	9,300	5,800	5,000	3,900
80	9,600	6,500	5,500	4,100	80	9,000	5,600	4,700	3,700
85	8,500	6,300	5,200	3,900	85	8,500	5,500	4,400	3,400
90	7,600	6,100	4,900	3,600	90	8,000	5,300	4,200	3,200
95	6,700	5,900	4,600	3,400	95	7,100	5,200	4,000	3,000
100	5,900	5,700	4,400	3,200	100	6,300	5,100	3,800	2,800
105	5,300	5,400	4,200	3,000	105	5,600	4,900	3,600	2,600
110	4,700	5,100	4,000	2,800	110	5,000	4,700	3,500	2,500
115	4,100	4,700	3,800	2,600	115	4,400	4,500	3,300	2,300
120	3,600	4,200	3,600	2,500	120	3,900	4,300	3,200	2,200
125	3,200	3,800	3,400	2,300	125	3,400	4,100	3,000	2,100
130	2,800	3,300	3,200	2,200	130	3,000	3,800	2,900	1,900
135	2,400	2,900	2,800	2,100	135	2,600	3,300	2,800	1,800
140	2,100	2,600	2,400	2,000	140	2,200	3,000	2,700	1,700
145	1,800	2,300	2,100	1,800	145	1,900	2,600	2,400	1,600
150	1,500	2,000	1,800	1,700	150	1,600	2,300	2,100	1,500
155	1,200	1,700	1,500	1,500	155	1,300	2,000	1,800	1,500
160		1,400	1,300	1,200	160		1,700	1,500	1,400
165		1,200	1,000		165		1,400	1,200	1,200
170		1,000			170		1,100	1,000	1,000

This information is not for crane operation. Operator must refer to the in – cab information for crane operation. Rated lifting capacities shown on fully extended outriggers do not exceed 85% of the tipping loads and on tires do not exceed 75% of the tipping loads.

14,400 lb Counterweight -- Fully Extended Outriggers -- 360˚ Rotation
(All Capacities Are Listed In Pounds)

127 ft Main Boom Length 30˚ Fly Offset					127 ft Main Boom Length 45˚ Fly Offset				
Radius (ft)	Fly Length (ft)				Radius (ft)	Fly Length (ft)			
	38	64	80	96		38	64	80	96
55	9,100				55				
60	8,900				60				
65	8,700				65	8,100			
70	8,600				70	8,000			
75	8,500				75	7,900			
80	8,300	4,900	3,900		80	7,700			
85	8,000	4,800	3,700	3,000	85	7,700			
90	7,700	4,700	3,500	2,800	90	7,400	4,200	3,100	
95	7,400	4,600	3,400	2,600	95	7,200	4,200	2,900	2,300
100	6,700	4,500	3,200	2,400	100	6,900	4,100	2,800	2,200
105	6,000	4,400	3,100	2,300	105	6,200	4,100	2,700	2,100
110	5,300	4,300	2,900	2,200	110	5,500	4,100	2,600	1,900
115	4,700	4,200	2,800	2,000	115	4,900	4,000	2,500	1,800
120	4,100	4,000	2,700	1,900	120	4,300	3,900	2,500	1,700
125	3,600	3,900	2,600	1,800	125	3,700	3,800	2,400	1,600
130	3,200	3,700	2,500	1,700	130		3,600	2,300	1,500
135	2,700	3,600	2,500	1,600	135		3,500	2,300	1,500
140	2,300	3,300	2,400	1,500	140		3,400	2,200	1,400
145	1,900	2,900	2,300	1,400	145		3,100	2,200	1,300
150		2,500	2,300	1,300	150		2,700	2,100	1,200
155		2,200	2,100	1,300	155		2,300	2,100	1,200
160		1,900	1,800	1,200	160		1,900	1,900	1,100
165		1,500	1,500	1,200	165			1,600	1,100
170		1,200	1,200	1,100	170			1,300	1,100
175				1,000	175				1,000

This information is not for crane operation. Operator must refer to the in – cab information for crane operation. Rated lifting capacities shown on fully extended outriggers do not exceed 85% of the tipping loads and on tires do not exceed 75% of the tipping loads.

18,400 lb Counterweight -- Fully Extended Outriggers -- 360˚ Rotation (All Capacities Are Listed In Pounds)					
98.7 ft Main Boom Length 2˚ Fly Offset			98.7 ft Main Boom Length 15˚ Fly Offset		
Radius (ft)	Fly Length (ft)		Radius (ft)	Fly Length (ft)	
	38	64		38	64
30	16,200		30		
35	15,600	10,300	35		
40	14,900	9,900	40	12,500	
45	14,300	9,400	45	12,000	
50	13,600	9,000	50	11,500	7,400
55	13,000	8,500	55	11,100	7,000
60	12,500	8,100	60	10,700	6,700
65	11,900	7,700	65	10,300	6,400
70	11,400	7,300	70	10,000	6,200
75	11,000	7,000	75	9,700	5,900
80	10,500	6,700	80	9,400	5,700
85	9,400	6,400	85	9,100	5,500
90	8,400	6,100	90	8,800	5,300
95	7,500	5,800	95	7,800	5,100
100	6,700	5,600	100	7,000	5,000
105	5,900	5,400	105	6,200	4,800
110	5,300	5,200	110	5,500	4,700
115	4,700	5,000	115	4,900	4,600
120	4,200	4,900	120	4,400	4,500
125	3,700	4,500	125	3,800	4,400
130		4,100	130		4,300
135		3,700	135		3,900
140		3,300	140		3,500
145		2,900	145		3,100
150		2,600	150		2,800
155		2,300	155		

This information is not for crane operation. Operator must refer to the in – cab information for crane operation. Rated lifting capacities shown on fully extended outriggers do not exceed 85% of the tipping loads and on tires do not exceed 75% of the tipping loads.

18,400 lb Counterweight -- Fully Extended Outriggers -- 360˚ Rotation (All Capacities Are Listed In Pounds)					
98.7 ft Main Boom Length 30˚ Fly Offset			98.7 ft Main Boom Length 45˚ Fly Offset		
Radius (ft)	Fly Length (ft)		Radius (ft)	Fly Length (ft)	
	38	64		38	64
45	10,100		45		
50	9,800		50		
55	9,500		55	8,600	
60	9,300		60	8,400	
65	9,000	5,400	65	8,300	
70	8,800	5,200	70	8,100	
75	8,600	5,100	75	8,000	
80	8,500	4,900	80	7,900	4,400
85	8,300	4,800	85	7,800	4,300
90	8,200	4,700	90	7,700	4,300
95	8,000	4,600	95	7,600	4,200
100	7,300	4,500	100	7,500	4,200
105	6,500	4,400	105	6,600	4,100
110	5,700	4,300	110		4,100
115	5,100	4,200	115		4,100
120	4,400	4,200	120		4,100
125		4,100	125		4,100
130		4,100	130		4,100
135		4,100	135		4,100
140		3,700	140		
145		3,200	145		

This information is not for crane operation. Operator must refer to the in – cab information for crane operation. Rated lifting capacities shown on fully extended outriggers do not exceed 85% of the tipping loads and on tires do not exceed 75% of the tipping loads.

18,400 lb Counterweight -- Fully Extended Outriggers -- 360° Rotation
(All Capacities Are Listed In Pounds)

127 ft Main Boom Length 2° Fly Offset					127 ft Main Boom Length 15° Fly Offset				
Radius (ft)	Fly Length (ft)				Radius (ft)	Fly Length (ft)			
	38	64	80	96		38	64	80	96
35	10,900				35				
40	10,900				40				
45	10,900	7,300			45	10,400			
50	10,900	7,300	5,800		50	10,300			
55	10,900	7,200	5,800	4,500	55	10,100			
60	10,900	7,100	5,800	4,500	60	9,900			
65	10,700	6,900	5,800	4,500	65	9,700	6,100	5,600	
70	10,500	6,800	5,800	4,500	70	9,500	6,000	5,300	4,200
75	10,200	6,600	5,800	4,500	75	9,300	5,800	5,000	3,900
80	9,600	6,500	5,500	4,100	80	9,000	5,600	4,700	3,700
85	9,100	6,300	5,200	3,900	85	8,500	5,500	4,400	3,400
90	8,600	6,100	4,900	3,600	90	8,100	5,300	4,200	3,200
95	7,700	5,900	4,600	3,400	95	7,800	5,200	4,000	3,000
100	6,900	5,700	4,400	3,200	100	7,300	5,100	3,800	2,800
105	6,200	5,400	4,200	3,000	105	6,500	4,900	3,600	2,600
110	5,500	5,100	4,000	2,800	110	5,800	4,700	3,500	2,500
115	4,900	4,900	3,800	2,600	115	5,200	4,500	3,300	2,300
120	4,400	4,700	3,600	2,500	120	4,700	4,300	3,200	2,200
125	3,900	4,500	3,400	2,300	125	4,200	4,100	3,000	2,100
130	3,500	4,000	3,300	2,200	130	3,700	4,000	2,900	1,900
135	3,100	3,600	3,200	2,100	135	3,300	3,800	2,800	1,800
140	2,700	3,200	3,000	2,000	140	2,900	3,600	2,700	1,700
145	2,400	2,900	2,700	1,800	145	2,500	3,200	2,600	1,600
150	2,100	2,600	2,400	1,700	150	2,200	2,900	2,500	1,500
155	1,800	2,300	2,100	1,700	155	1,800	2,500	2,400	1,500
160		2,000	1,800	1,600	160		2,200	2,100	1,400
165		1,700	1,500	1,500	165		1,900	1,800	1,300
170		1,500	1,300	1,200	170		1,700	1,500	1,300
175		1,300	1,100	1,000	175		1,400	1,300	1,200
180		1,100			180		1,100	1,000	1,000

This information is not for crane operation. Operator must refer to the in – cab information for crane operation. Rated lifting capacities shown on fully extended outriggers do not exceed 85% of the tipping loads and on tires do not exceed 75% of the tipping loads.

18,400 lb Counterweight -- Fully Extended Outriggers -- 360˚ Rotation
(All Capacities Are Listed In Pounds)

127 ft Main Boom Length 30˚ Fly Offset					127 ft Main Boom Length 45˚ Fly Offset				
Radius (ft)	Fly Length (ft)				Radius (ft)	Fly Length (ft)			
	38	64	80	96		38	64	80	96
55	9,100				55				
60	8,900				60				
65	8,700				65	8,100			
70	8,600				70	8,000			
75	8,500				75	7,900			
80	8,300	4,900	3,900		80	7,700			
85	8,000	4,800	3,700	3,000	85	7,700			
90	7,700	4,700	3,500	2,800	90	7,400	4,200	3,100	
95	7,400	4,600	3,400	2,600	95	7,200	4,200	2,900	2,300
100	7,100	4,500	3,200	2,400	100	6,900	4,100	2,800	2,200
105	6,800	4,400	3,100	2,300	105	6,700	4,100	2,700	2,100
110	6,100	4,300	2,900	2,200	110	6,300	4,100	2,600	1,900
115	5,500	4,200	2,800	2,000	115	5,600	4,000	2,500	1,800
120	4,900	4,000	2,700	1,900	120	5,000	3,900	2,500	1,700
125	4,400	3,900	2,600	1,800	125	4,400	3,800	2,400	1,600
130	3,900	3,700	2,500	1,700	130	3,900	3,600	2,300	1,500
135	3,400	3,600	2,500	1,600	135		3,500	2,300	1,500
140	3,000	3,500	2,400	1,500	140		3,400	2,200	1,400
145	2,600	3,400	2,300	1,400	145		3,400	2,200	1,300
150		3,100	2,300	1,300	150		3,300	2,100	1,200
155		2,800	2,200	1,300	155		2,800	2,100	1,200
160		2,400	2,200	1,200	160		2,400	2,100	1,100
165		2,100	2,000	1,200	165			2,100	1,100
170		1,700	1,700	1,100	170			1,800	1,100
175		1,400	1,400	1,100	175				1,000
180			1,200	1,100	180				1,000
185					185				1,000

This information is not for crane operation. Operator must refer to the in – cab information for crane operation. Rated lifting capacities shown on fully extended outriggers do not exceed 85% of the tipping loads and on tires do not exceed 75% of the tipping loads.