LOAD CHARTS

for Use With

WRITTEN EXAMINATIONS

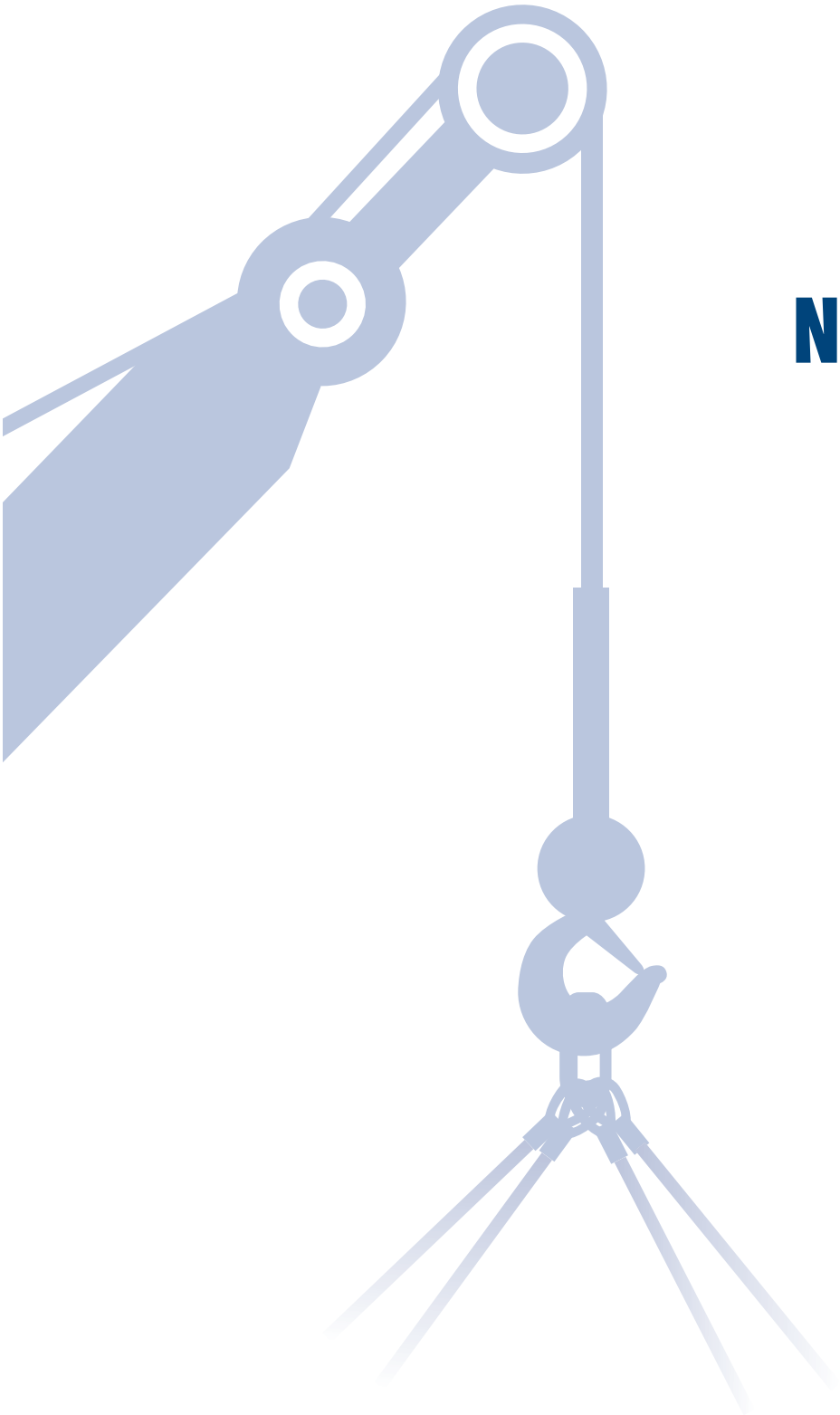

National N-55

Manitowoc Crane Group, by providing pages of one of its manuals, is not providing a substitute for training on a Manitowoc crane.

These pages are reproduced for illustration only and not as a substitute for reviewing the entire manual for a particular crane.

Make sure that you are fully trained on, and review the entire manual for, every crane you operate.

This load chart has been adapted from the original manufacturer's load chart for use in the NCCER Mobile Crane Certification Examination. It is not to be used for calculating loads, planning lifts, or for any other purpose.

SAFETY IN EQUIPMENT MAINTENANCE AND INSPECTION

Safe operations depends on you, the condition of your maintenance, and inspection procedures.
The single most important factor in the prevention of equipment failure and accidents is a positive attitude towards safety. The habit of anticipating possible problems normally prevents many accidents from occurring.

Inspection checks are not to be overlooked. Below are listed several important inspections that should be performed before and during operation of the unit. Further detailed inspection requirements are listed in the Maintenance Section.

- Chassis – check the oil level, battery, lights and brakes.
- Tires – check for proper inflation, cuts, loose wheel nuts.
- Safety accessories – check for proper function, oil level, leaks, etc.
- Hydraulic oil reservoir – check for proper oil level, leaks.
- Structurals – visually inspect complete crane for damage especially for cracks in weldments.
- Fasteners – check all pins, sheaves, retainers, bolts and nuts. Check for presence and proper tightness.
- Sheaves – check for rope wear, cracks and bearing condition (if equipped with optional winch)
- Hose/fittings – check for leaks, abrasion and loose clamps.
- Crane hooks – check hook for safety catch, twist and opening of hook throat.
- Covers and gaurds – check for proper installation.
- Operating placards and safety signs – check for missing, illegible defaces signs and placards. AT A MINIMUM YOUR CRANE MUST CONTAIN INFORMATION ON THE DECALS SHOWN ON PAGES 7 THROUGH 9. IF THESE DECALS ARE NOT PRESENT OR NOT LEGIBLE, CONTACT NATIONAL CRANE IMMEDIATELY TO ORDER THEM.
- Lifting rope/slings – check rope and slings for frayed edges, broken strands, kinks flat spots and end attachments for unsafe conditions.
- Sheaves (on cranes equipped with winches) – check for rope wear, cracks, and bearing condition.

AT EACH OPERATOR STATION

CAPACITY CHART

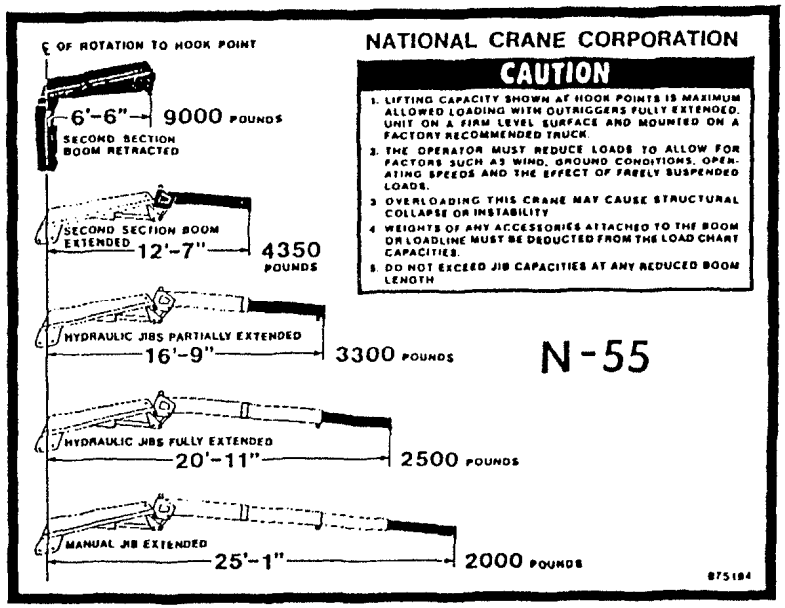

CONTROL IDENTIFICATION

(ALL CONTROLS)

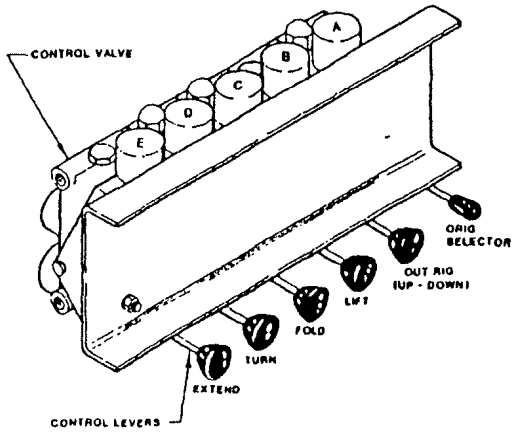

CONTROLS

CAB CONTROLS

Power Take-off

Manual Shift Control – The PTO's are engaged when the knobs on dash or floor are pulled out and disengaged when the knobs are pushed in. The truck gear shift lever must be in neutral and the clutch depressed whenever knobs are removed.

All Shift Control – The PTO is engaged when the switch is moved to apply air to PTO and disengaged when switch is in off position. The truck gear shift lever must be in neutral and clutch depressed when switch is moved.

Electrical Shift Control – Full torque electric shift PTO's are controlled by a switch. To operate, disengage the clutch, shift to fourth or fifth gear and operate the switch down to engage the PTO or up to disengage the PTO. Return the gearshift to neutral and engage the clutch. If the vehicle is equipped with automatic transmission, the power take-off may be engaged by placing the transmission selector lever in any driving position and then engaging the PTO. The transmission selector lever must be turned to "N" for stationary vehicle operation. The power take-off may be disengaged while in any transmission range provided that the load has first been removed from the PTO.

Park Brake

The truck brake must be firmly set before leaving cab to begin operation. If the ground surface is icy or slick or is sloped, you may be required to help immobilize the truck with wheel chocks.

CRANE CONTROLS

The unit is equipped with control stations on each side of the main frame. Placards on control knobs or next to the lever indicate the direction to actuate the controls for the various unit functions. Each station is complete and provides complete control of boom rotation, both elevation, boom extension, winch, outriggers, and engine foot throttle.

Control Functions

The unit is equipped with control stations on each side of the main frame. Placards on the control knobs or next to the lever indicate the direction to actuate the controls for the various unit functions. Each station is complete and provides complete control of boom rotation, boom lift, boom fold, boom extension, winch and outriggers.

Control Functions

Turn – Raise the lever to rotate the boom in a clockwise direction. Lower the lever to rotate the boom in a counterclockwise direction as viewed from the top of the crane.

Boom Lift – Lower the lever to lower the inner boom. Raise the lever to raise the inner boom.

Boom Fold – Lower the lever to fold the outer boom under and down. Raise the lever to fold the outer boom out and up.

Boom Telescope – Lower the lever to retract the hydraulic extensions. Raise the lever to extend the hydraulic extensions.

⚠CAUTION

WHEN EQUIPPED WITH OPTIONAL WINCH, PAYOUT LOADLINE BEFORE EXTENDING BOOM. FAILURE TO DO SO MAY CAUSE THE LOADLINE TO BREAK OR DAMAGE THE CRANE.

Outrigger Selector – Raise the lever for driver's side outrigger operation. Lower lever for passenger's side outrigger operation. Position lever in CENTER to move outriggers inward and outward.

Outriggers – Raise the lever to raise the outrigger legs or retract horizontal beams. Lower the lever to lower the outrigger legs or extend horizontal beams.

Hand Throttle (Driver's Side Only) – Pull the hand throttle out to accelerate the truck engine speed and rotate counterclockwise to lock. Increasing truck speed increases operating speed. Unlock and push in to return to idle speed.

Capacity Chart – This chart shows capacities of crane at various operating hook points.

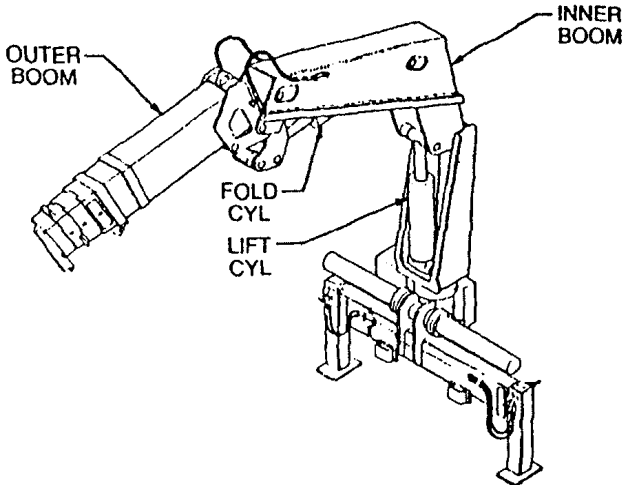

OPERATING PROCEDURES

EQUIPMENT FAMILIARIZATION
Members of the crew should become thoroughly familiar with the location and operation of controls, the correct operating procedure, the maximum lifting capacities and safety precautions applicable to the unit before operating. This crane is a complex piece of equipment and can be overloaded in many ways. Carefully follow the operating procedures outlines below.

EQUIPMENT CHECKS
Perform the following checks prior to placing the unit in operation:

- Inspect for any unusual conditions such as pools of hydraulic fluid or lubrication oil under the chassis, any outrigger which may have crept down or any signs of damage or improper maintenance.
- Check that the tires are inflated to the proper pressure.
- Check the level of the hydraulic reservoir.
- Check for loose and missing bolts.
- Check pins for proper installation and retainer secureness.
- Check for damaged structural members and welds.
- Check to see anti-two block works correctly (if equipped with optional winch).
- Check all rope guides and cable keeper (if equipped with optional winch).
- Check all sheaves for free turning (if equipped with optional winch).
- Check the loadline cable for kinks, broken strands or other damage in accordance with instructions in the "Lubrication & Maintenance" section (if equipped with optional winch).
- Check to see that the hydraulic hoses and fittings are in good condition and show no signs of leaking. The hoses should be free from cuts and abrasions and there should be no evidence of binding. Any damage or leakage should be repaired immediately.

NOTE: CONSULT TRUCK MANUFACTURER'S MANUAL FOR VEHICLE CHECKS.

WORK SITE POSITION
Always seek the best possible work site when parking the crane. An ideal parking location at a job site is firm, level, dry ground or pavement located in close proximity to the work station. Avoid uneven, rocky or muddy terrain, steep grades or locations with unnecessary overhead obstructions. Location should be selected such that outriggers can be fully extended horizontally and vertical leg comes down on firm level surface. Particular care must be taken in selecting site position to the location of overhead power lines so that proper clearance conditions can be maintained. Ideally, one should select a location at which the boom could not come within the minimum recommended distance of the power lines.

It is best to select a location on the site such that most of the lifting can be done over the outrigger support or rear of the truck.

BEFORE LEAVING THE CAB

1. Set the truck hand brake securely and turn the front wheels into the curb, if applicable. Wheel chocks may be required under certain conditions.
2. With the gear shift in neutral, depress clutch (if equipped with a manual transmission), and engage the power take-off by pulling out the shifting knob.
3. Bring the hydraulic system up to operating temperature (oil reservoir warm to the touch) by allowing the system to operate with all controls at neutral.

SETTING THE OUTRIGGERS

1. Before conduction any boom operations, extend both outriggers to full horizontal then downward to make firm contact with the ground. Provide blocks, if necessary, to level the unit on sloping ground or bearing pads if the outriggers tend to sink into soft terrain or hot asphalt. Some concrete or asphalt surfaces are relatively thin and cannot withstand outrigger loading. Concrete can break through and cause instability.
2. All outriggers shall be extended fully out then down to a firm surface. Park the vehicle on level front to back and use outriggers as necessary to level the truck side to side. If the outriggers are not visible at the operator's station, a signal person should be used to be sure the outriggers are set safely.

⚠CAUTION

WHEN EQUIPPED WITH OPTIONAL WINCH, PAYOUT LOADLINE BEFORE EXTENDING BOOM. FAILURE TO DO SO MAY CAUSE THE LOADLINE TO BREAK OR DAMAGE THE CRANE.

It is not recommended to remove all the vehicle weight from wheels. Extreme caution must be used when operating in areas around the truck not supported by outriggers because of cushion of tires and springs. Also, when swinging loads from areas supported by outriggers to areas not supported by outriggers, extreme caution must be used because of a potential sudden shifting of the support point. Always keep the load as close to the ground as possible when operating.

BOOM UNSTOWING PROCEDURE

1. Push the fold control lever down, raise the outer boom as high as it will go.
2. Raise the lift cylinder control lever which will cause the inner boom to lift. Raise it to a position that will allow the outer boom to unfold.
3. Raise the fold control level and unfold the outer boom.
4. Before using the crane, unhook the load hook from its slow pin so that the hydraulic extensions may be extended and retracted.

BEFORE MAKING THE LIFT

1. Check all controls for proper operation by operating each system through one complete cycle. This is particularly important after the unit has been serviced or repaired. If any abnormal operations are detected, correct the condition before continuing.
2. During all operations, the controls should be metered when beginning or terminating a movement to prevent sudden starting or stopping which imposes undue shock loads on the equipment. This metering can be performed by metering the control lever.
3. Check the operating area for electric power lines.

READING AND UNDERSTANDING THE CAPACITY CHART

The structures and components of your unit are designed to provided satisfactory service if the unit is not loaded in excess of the maximum capacities specified on the capacity chart. Overloading can create serious potential safety hazards and can also shorten the service life of your unit. It is important that you know the weight of any load that you are attempting to handle. This should be done by use of a dynamometer or by contacting your supervisor.

Overloading a crane can cause many types of failure depending on the configuration and working position of the crane, i.e. structural damage to almost any part of the crane, winch or cable failure and tipping over the unit.

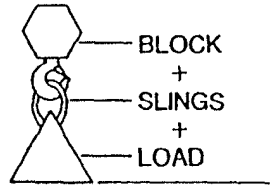

TOTAL RATED LOADS

The capacity chart shows the maximum rated loads including load (weight being lifted), load handling equipment such as slings, buckets, and downhaul weights, etc. which can be handled by the crane and the winch. The weight of the load handling equipment and boom attachments must be deducted from the maximum load rating shown on the capacity chart to determine the payload which can be lifted. Additional reduction may be necessary to make allowance for such factors as the effects of freely suspended loads, wind, ground conditions, out-of-level conditions and operating speeds.

The ratings shown on the capacity chart are based on the structural integrity of the crane and winch and represent a stability tipping factor of 85% when:

1. All outriggers are extended with positive contact on firm, level surface.
2. The proper amount of counterweight has been installed, if required.
3. The unit is mounted in accordance with factory instructions on a vehicle with proper specifications.
4. Tires are inflated to the proper pressure.
5. The weight of load handling devices is considered as a part of the load being lifted.
6. Adverse environmental conditions such as wind are not present.
7. The operator controls the loads smoothly.

A stability test should have been performed on this crane and can be repeated by a reference to the installation Section of the Operation and Maintenance manual.

This crane is referred to as a “hook point machine” when discussing capacities. That is, the capacities are shown on the capacity chart as the capacities at specific hook points rather than as at specific loads radius or combinations of boom angles and boom lengths. Because this is a hook point machine, a load can be lifted if the load falls within the capacity of the particular hook point used to position the load. If the load is within the capacity of the hook point that is used to raise the loads, the load can be positioned anywhere the hook arc permits. The capacity chart is located near the operator’s station for quick reference concerning loads which can or cannot be handled.

The following procedure is a typical method which must be used to determine the crane’s ability to handle a load:

1. Determine the weight of the load and load handling equipment.
2. Determine the radius from centerline of crane rotation to position of load.
3. Determine the radius from centerline of crane rotation to center of point where load is being moved to.
4. Refer to Capacity Chart for crane and determine what hook point will be used to insure that the load does not exceed the capacity of the hook point.
5. Refer to Capacity Chart for winch, if equipped, to insure the load does not exceed the winch capacity.

WINCH SYSTEM OPERATION (OPTIONAL)

The winch is mounted on the rear bottom of the outer boom. It has capacities totally independent of the rest of the crane and can normally pull more than the crane itself can withstand. Therefore, care must be taken to insure that the load being lifted is within boom rating. To lift some of the heavier loads on the capacity chart, it will be necessary to multiple-part reeve the winch block to increase the lifting capacity of the winch (the speed is proportionately slower) and remain in the strength limitations of the winch and wire rope.

The winch load rating chart on each machine provides the information for pull limitations on the winch with various applicable part reevings. These ratings are based on providing the proper operating safety factor on the wire rope supplied with the machine. Therefore, any replacement rope must meet the rope specifications for size, construction and strength as outlined in specification sections of this manual.

GENERAL RULES WHEN OPERATING WINCH

1. Always operate the winch control to payout the loadline while extending the boom. This will maintain clearance between the boom tip and loadline hook.
2. Do not pull load block into boom tip except when testing anti-two block system.
3. Make certain the winch cable is not twisted or kinked and that cable is properly seated on the drum and in the sheaves.
4. Before lifting a load, always make certain that three full wraps of rope will remain on the drum at all times throughout the lift.
5. Do not drag loads in any direction with the winch.
6. Never attempt to lift loads which are not loose and free, i.e. frozen down material or poles out of ground.
7. Maintain tension on the loadlines at all times to prevent the cable from becoming twisted or kinked or improperly seated on the winch drum or sheaves.
8. The winch and sheave clocks must be rigged as shown in the operator's manual.
9. If anti-two block system is on the machine it must be rigged and tested for operation prior to using the winch.

LIFTING THE LOAD

After the vehicle and crane have been properly set up and it has been determined the load to be lifted is within the ratings of the crane and winch reeving system, if equipped, again check the work area for electric power lines and other obstructions so that proper clearances can be maintained. (See Safety Rules.) If load is not visible to operator throughout lift, a person must be appointed to use hand signals as shown on the last page of this section. Proceed with lifting the load.

1. Set engine speed as required, then rotate, extend or move boom up or down until boom tip is directly over the load.
2. Most cranes are equipped with 390° rotation stop. It is important that you be aware of the position of the stop before lifting in order to assure maximum rotation and prevent excessive handling of the load.
3. During operations, the controls should always be metered when beginning or terminating movement to prevent sudden starting or stopping, which imposes undue shock loads on the equipment. This is especially true when handling heavy loads. The control should be slightly actuated to begin movement and then slowly increased to desired operating speed.
4. Lower boom tip and attach load.
5. Control load by use of a non-conductive tag line.
6. When lifting maximum loads, operate with the outer boom slightly folded in relationship to the inner boom for the greatest lifting power.

STOWING PROCEDURE

The following procedure outlines the step-by-step process that should be followed when stowing and unstowing the boom.

1. Retract all manual and hydraulic extensions. If the unit is equipped with an optional winch, clam, grapple, or personnel bucket, the option attachment bracket must be removed from the boom tip prior to stowing the boom.
2. With the lift cylinder, raise the inner boom to approximately horixontal.
3. Rotate crane until turn stow arrows are in alignment on base of mast.
4. Use the fold operation until the fold cylinder is fully retracted.
5. The inner boom is lowered until the stow pin swings down and onto the stow bracket.
6. To stow the boom, reverse the above procedure.